Consultancy service for Preparation of Detailed Project Report for Construction of Elevated Corridors

Bengaluru Smart Infrastructure Limited

Office of the Project Engineer-1, B-Smile, Room No.108,
1st Floor, Annexe-2 Building, N.R.Square, BBMP Bengaluru-560002

DETAILED PROJECT REPORT

- **Construction of Grade Separator at Kempegowda Circle Old Yelahanka.**

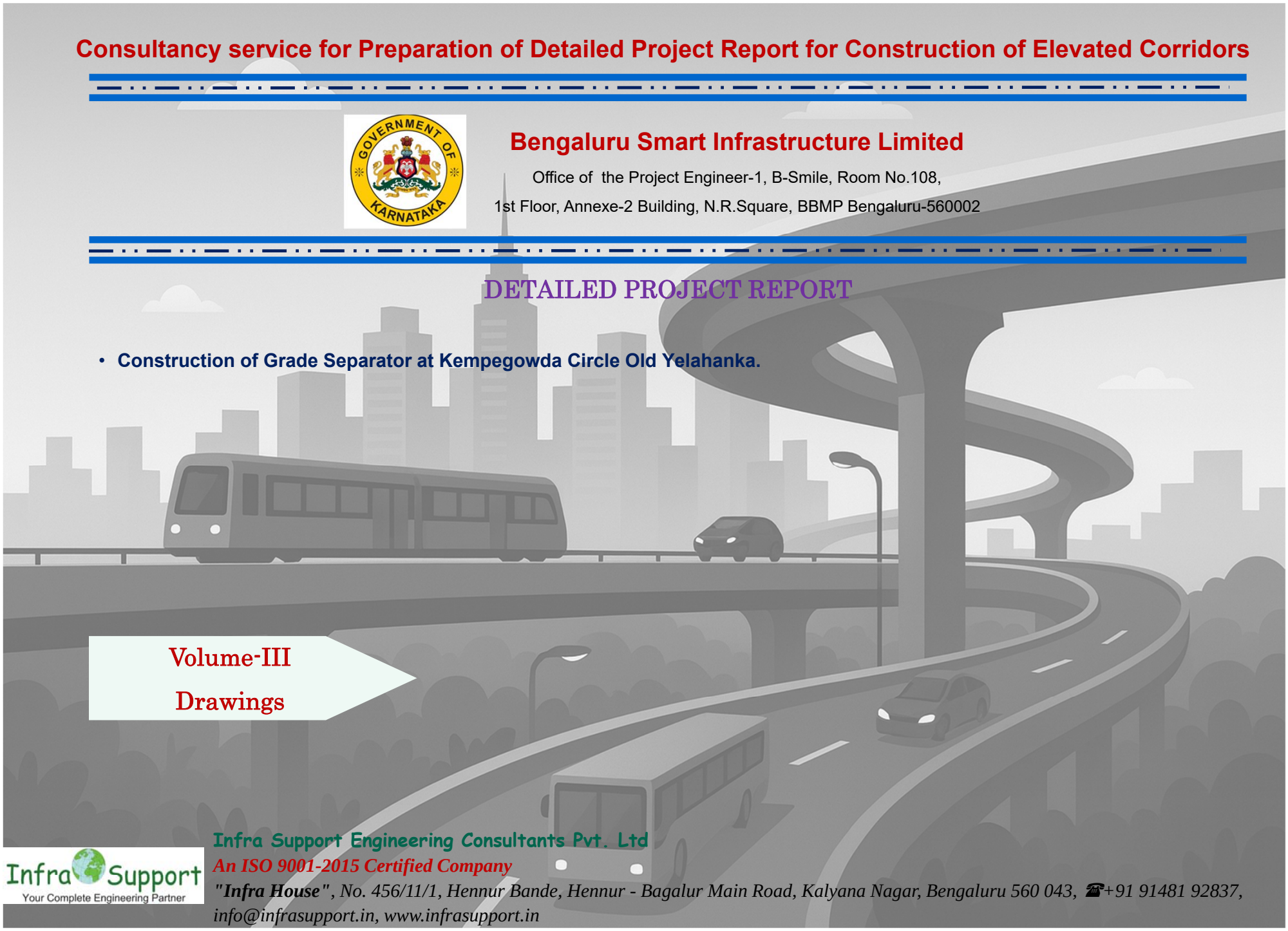

Volume-III
Drawings

Infra Support Engineering Consultants Pvt. Ltd
An ISO 9001-2015 Certified Company
*"**Infra House**", No. 456/11/1, Hennur Bande, Hennur - Bagalur Main Road, Kalyana Nagar, Bengaluru 560 043, ☎+91 91481 92837, info@infrasupport.in, www.infrasupport.in*

Construction of Grade Separator at Kempegowda Circle Old Yelahanka.

Summary of Elevated Corridor

Sl.No	Parameter	3.e
		Length in m
1	Length of Main Carriageway	280
2	Length of Round about (Junctions)	
3	Length of Split CW Section	785
4	Length of Ramps Section (MCW)	105
5	Length of Curved Section	
6	Length of Taper section	
7	Length of Down ramp	
8	Length of up ramp	
9	Length of Viaduct ramp (Up and Down)	
10	Length of Up & Down ramp	315
11	Length of Connecting Road	
	Total length of Improvement-Elevated	**1485**

SI NO.	DESCRIPTION	REVISION.	BY	DATE

RELEASED FOR
- ☒ Feasibility Report
- ☐ Detailed Project Report
- ☐ TENDER

CLIENT :

Bengaluru Smart Infrastructure Limited
Office of the Project Engineer-1, B-Smile,
Room No.108, 1st Floor, Annexe-2 Building,
N.R.Square, BBMP Bengaluru-560002

CONSULTANT:

Infra Support
Your Complete Engineering Partner

INFRA SUPPORT ENGINEERING CONSULTANTS PVT. LTD
An ISO 9001-2015 Certified Company
Infra House, #456/11/1, Hennur Bande,
Hennur Bagalur Main Road, Kalyan Nagar,
Bangalore - 560 043.
Phone: +91 80 25421364
Email: info@infrasupport.in www.infrasupport.in

DRAWN	VA	PROJECT:	Consultancy Service for Preparation of Detailed Project Report (DPR) for Construction of Elevated Corridors Package-1 & Package-3
DESIGNED	NNK		JOB NO. 2502
CHECKED	TRL		
DATE	June - 2025	TITLE :	ELEVATED CORRIDOR KEY MAP
SHEET	01 of 01	SCALE: As shown	DRG. NO. : IS \ 2502 \ HIG \ KM - 001
			REVISION R0

Infra Support

Your Complete Engineering Partner

Grade Separator at Kempegowda Circle Old Yelahanka

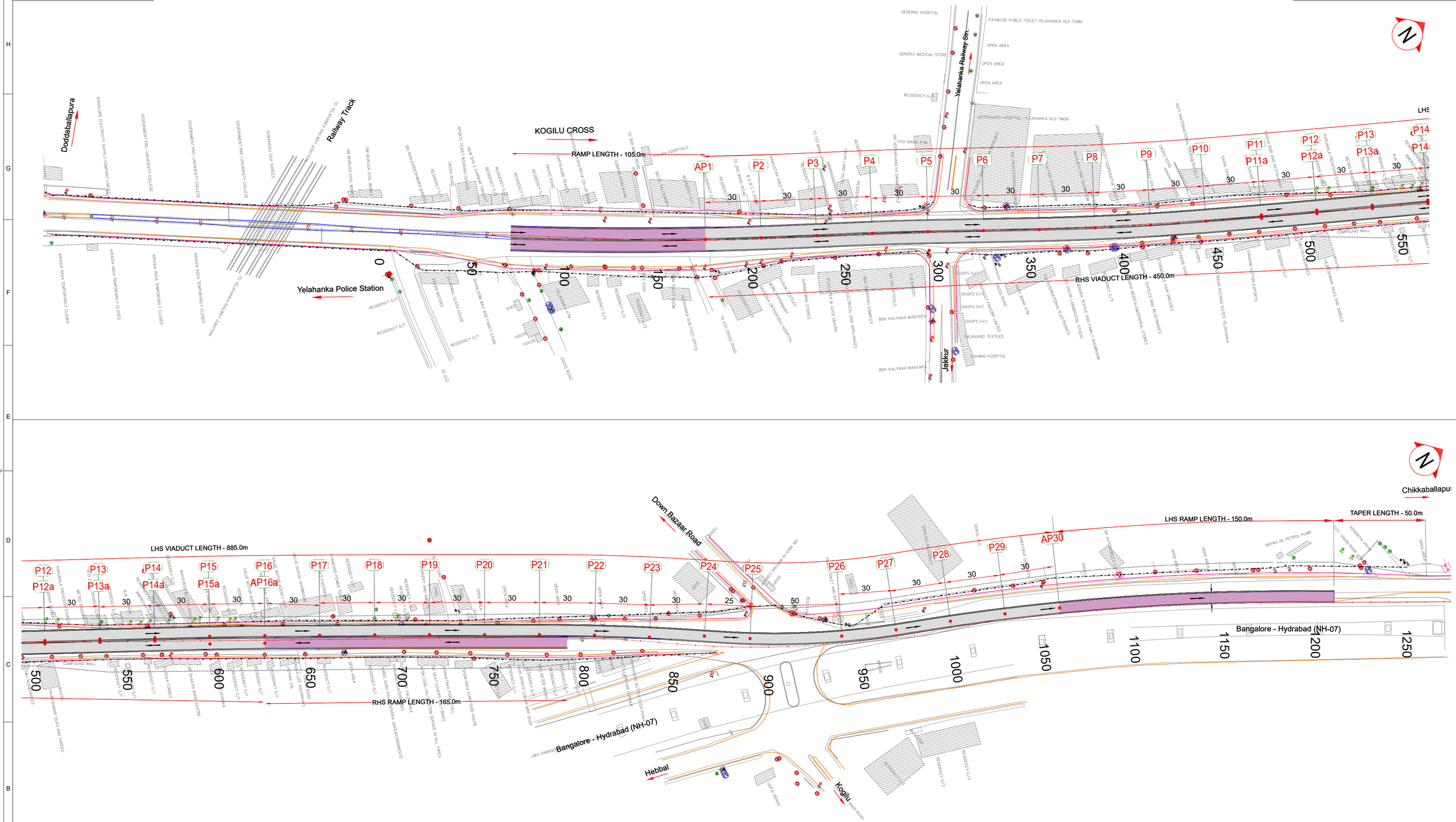

ELEVATED PLAN

SI NO.	DESCRIPTION	REVISION.	BY	DATE

RELEASED FOR

- [x] Draft Detailed Project Report
- [ ] Detailed Project Report
- [ ] TENDER

CLIENT :

Bengaluru Smart Infrastructure Limited
Office of the Project Engineer-1, B-Smile,
Room No.108, 1st Floor, Annexe-2 Building,
N.R.Square, BBMP Bengaluru-560002

CONSULTANT:

Infra Support
Your Complete Engineering Partner

INFRA SUPPORT ENGINEERING CONSULTANTS PVT. LTD
An ISO 9001-2015 Certified Company
Infra House, #456/11/1, Hennur Bande,
Hennur Bagalur Main Road, Kalyan Nagar,
Bangalore - 560 043.
Phone: +91 91 48192837
Email: info@infrasupport.in www.infrasupport.in

DRAWN	SK	PROJECT:	Draft Detailed Project Report (DDPR) for Construction of Elevated Corridors of Package - 3
DESIGNED	NNK	NAME OF WORK	Construction of Grade Separator at Kempegowda Circle Old Yelahanka
CHECKED	TRL		
DATE	Sep - 2025	TITLE :	Elevated Plan
SHEET	01 of 01	SCALE:	As shown

JOB NO. 2501

REVISION R0

DRG. NO. : IS \ 2501 \ HIG \EP - 01

Use of this drawing is restricted to those who have signed a contract with Infra Support Engineering Consultants Pvt. Ltd. Detailed Drawings\4. Final DPR\PACKAGE 3\IS\Sheet\EP.dwg

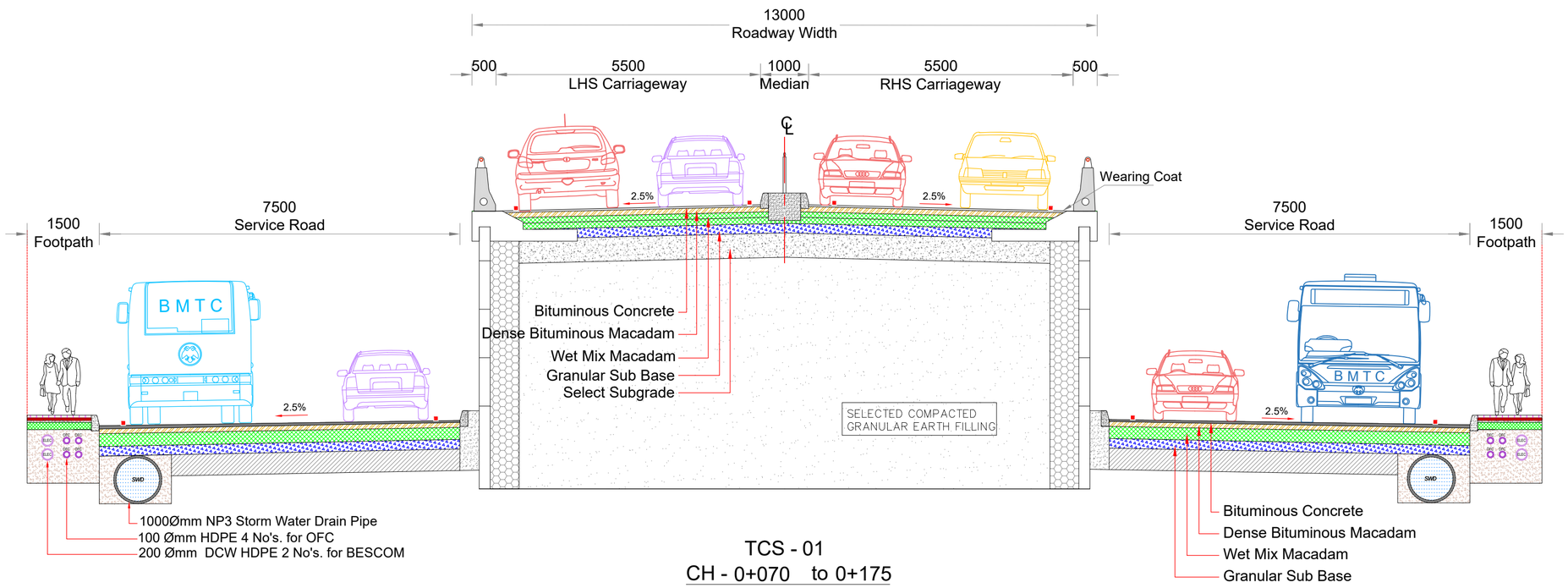

TCS - 01
CH - 0+070 to 0+175

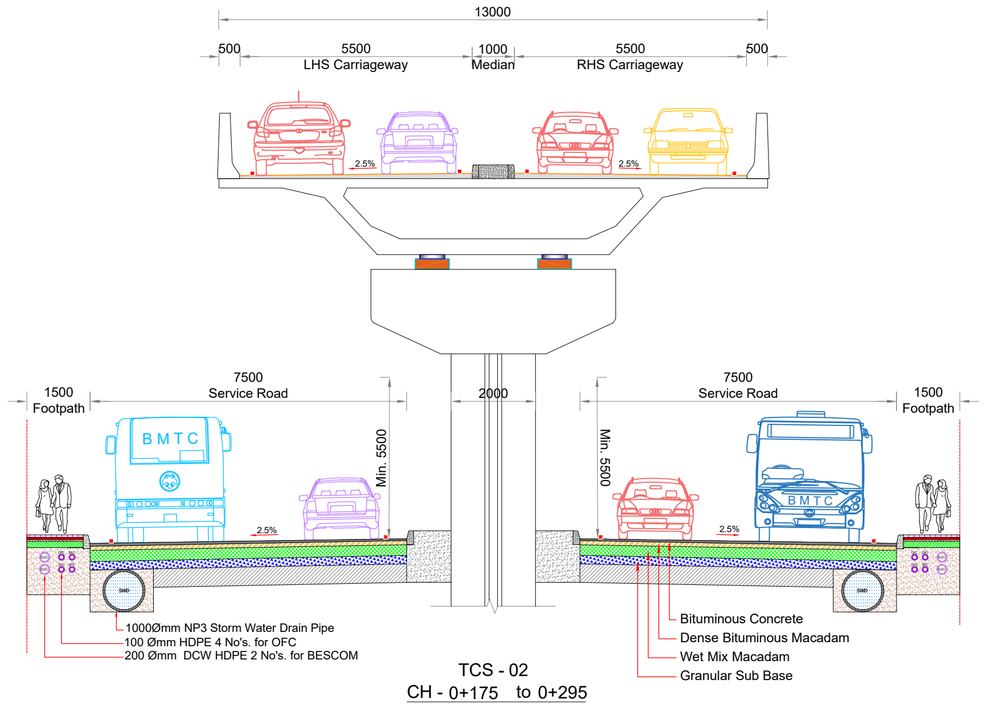

TCS - 02
CH - 0+175 to 0+295

SI NO.	DESCRIPTION	REVISION.	BY	DATE

RELEASED FOR
- Draft Detailed Project Report
- Detailed Project Report
- TENDER

CLIENT :
Bengaluru Smart Infrastructure Limited
Office of the Project Engineer-1, B-Smile,
Room No.108, 1st Floor, Annexe-2 Building,
N.R.Square, BBMP Bengaluru-560002

CONSULTANT:
Infra Support
Your Complete Engineering Partner
INFRA SUPPORT ENGINEERING CONSULTANTS PVT. LTD
An ISO 9001-2015 Certified Company
Infra House, #456/11/1, Hennur Bande,
Hennur Bagalur Main Road, Kalyan Nagar,
Bangalore - 560 043.
Phone: +91 91 48192837
Email: info@infrasupport.in www.infrasupport.in

DRAWN	SK	PROJECT:	Draft Detailed Project Report (DDPR) for Construction of Elevated Corridors of Package - 3
DESIGNED	NNK	NAME OF WORK	Construction of Grade Separator at Kempegowda Circle Old Yelahanka
CHECKED	TRL		
DATE	Sep - 2025	TITLE :	Typical Cross Section
SHEET	01 of 04	SCALE:	As shown

DRG. NO. : IS \ 2501 \ HIG \TCS - 01

JOB NO. 2501

REVISION R0

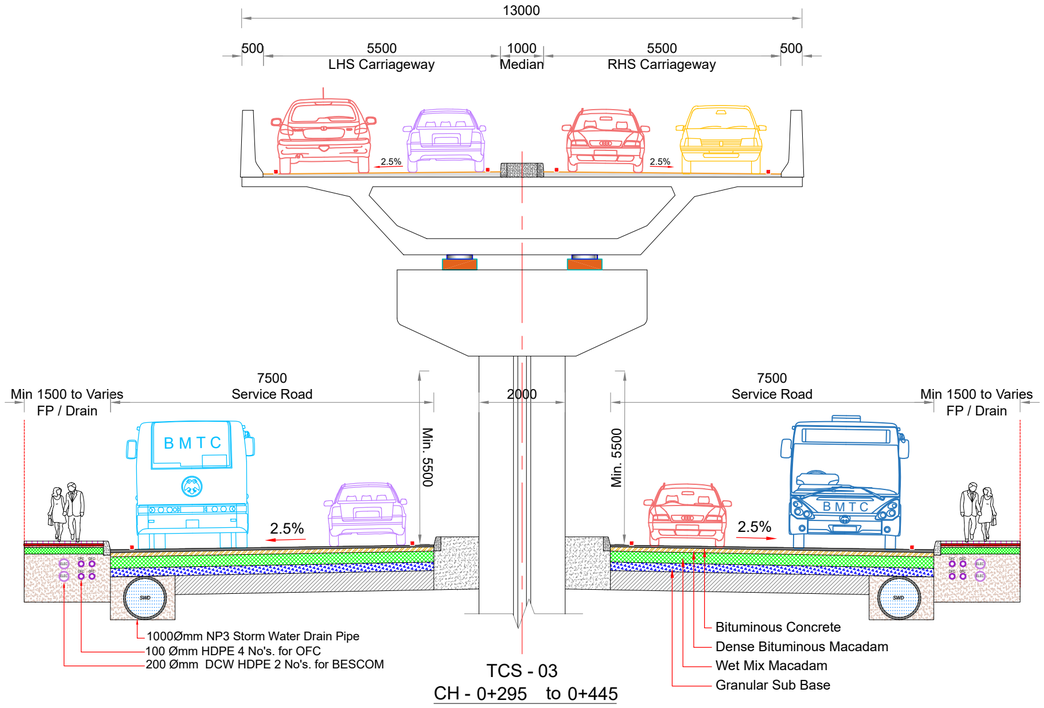

TCS - 03

CH - 0+295 to 0+445

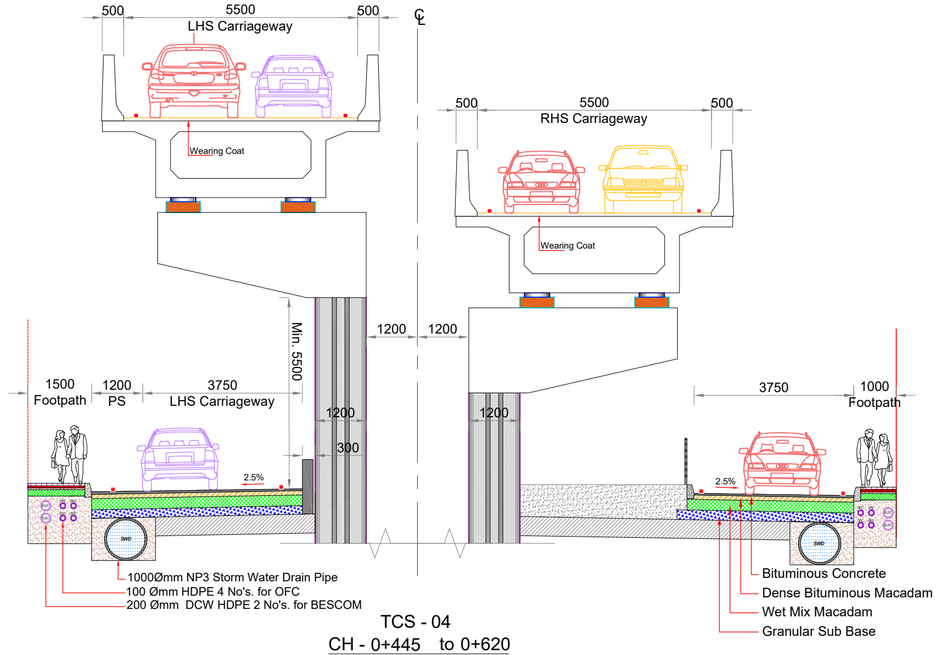

TCS - 04

CH - 0+445 to 0+620

SI NO.	DESCRIPTION	REVISION.	BY	DATE

RELEASED FOR

- ▨ Draft Detailed Project Report
- ☐ Detailed Project Report
- ☐ TENDER

CLIENT :

Bengaluru Smart Infrastructure Limited
Office of the Project Engineer-1, B-Smile,
Room No.108, 1st Floor, Annexe-2 Building,
N.R.Square, BBMP Bengaluru-560002

CONSULTANT:

Infra Support
Your Complete Engineering Partner

INFRA SUPPORT ENGINEERING CONSULTANTS PVT. LTD
An ISO 9001-2015 Certified Company
Infra House, #456/11/1, Hennur Bande,
Hennur Bagalur Main Road, Kalyan Nagar,
Bangalore - 560 043.
Phone: +91 91 48192837
Email: info@infrasupport.in www.infrasupport.in

DRAWN	SK	PROJECT:	Draft Detailed Project Report (DDPR) for Construction of Elevated Corridors of Package - 3		
DESIGNED	NNK	NAME OF WORK	Construction of Grade Separator at Kempegowda Circle Old Yelahanka	JOB NO.	2501
CHECKED	TRL				
DATE	Sep - 2025	TITLE :	Typical Cross Section	REVISION	R0
SHEET	02 of 04	SCALE:	As shown	DRG. NO. :	IS \ 2501 \ HIG \TCS - 02

192.168.2.7\Projects\PROJECTS\1. Elevated Corridors\Package 3\Draft DPR\PACKAGE 3 Title Sheet P3.dwg

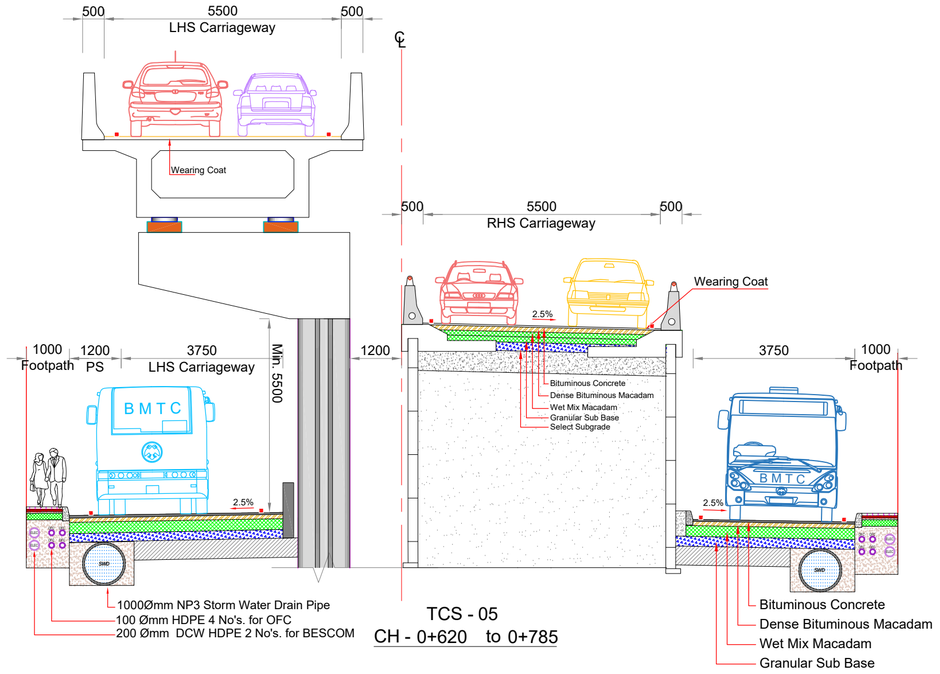

TCS - 05
CH - 0+620 to 0+785

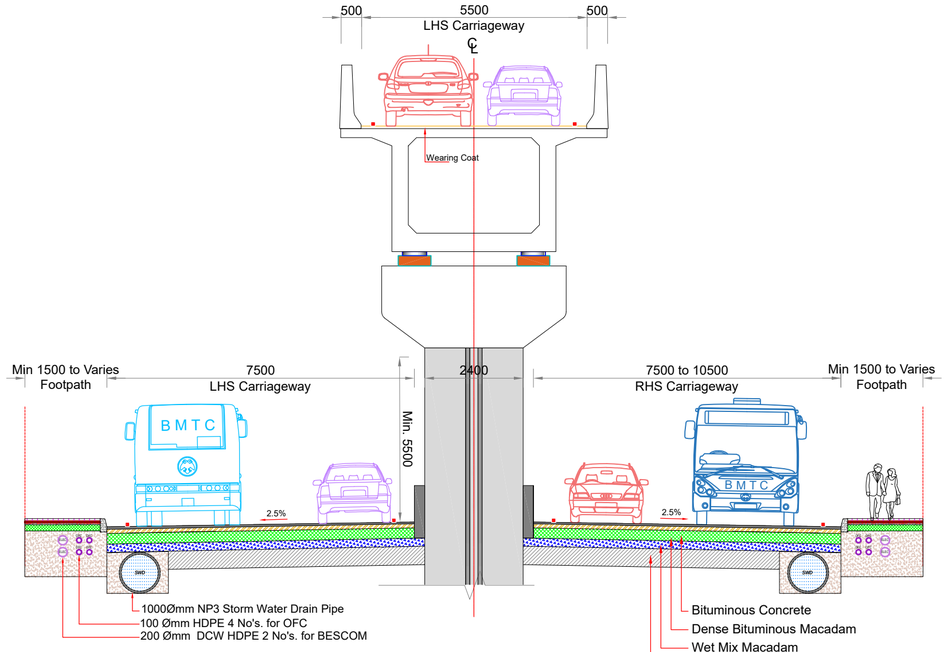

TCS - 06
CH - 0+785 to 0+940

SI NO.	DESCRIPTION	REVISION.	BY	DATE

RELEASED FOR
- Draft Detailed Project Report
- Detailed Project Report
- TENDER

CLIENT :
Bengaluru Smart Infrastructure Limited
Office of the Project Engineer-1, B-Smile,
Room No.108, 1st Floor, Annexe-2 Building,
N.R.Square, BBMP Bengaluru-560002

CONSULTANT:
Infra Support
Your Complete Engineering Partner
INFRA SUPPORT ENGINEERING CONSULTANTS PVT. LTD
An ISO 9001-2015 Certified Company
Infra House, #456/11/1, Hennur Bande,
Hennur Bagalur Main Road, Kalyan Nagar,
Bangalore - 560 043.
Phone: +91 91 48192837
Email: info@infrasupport.in www.infrasupport.in

DRAWN	SK	PROJECT:	Draft Detailed Project Report (DDPR) for Construction of Elevated Corridors of Package - 3
DESIGNED	NNK	NAME OF WORK	Construction of Grade Separator at Kempegowda Circle Old Yelahanka
CHECKED	TRL		
DATE	Sep - 2025	TITLE :	Typical Cross Section
SHEET	03 of 04	SCALE:	As shown

DRG. NO. : IS \ 2501 \ HIG \TCS - 03

JOB NO. 2501

REVISION R0

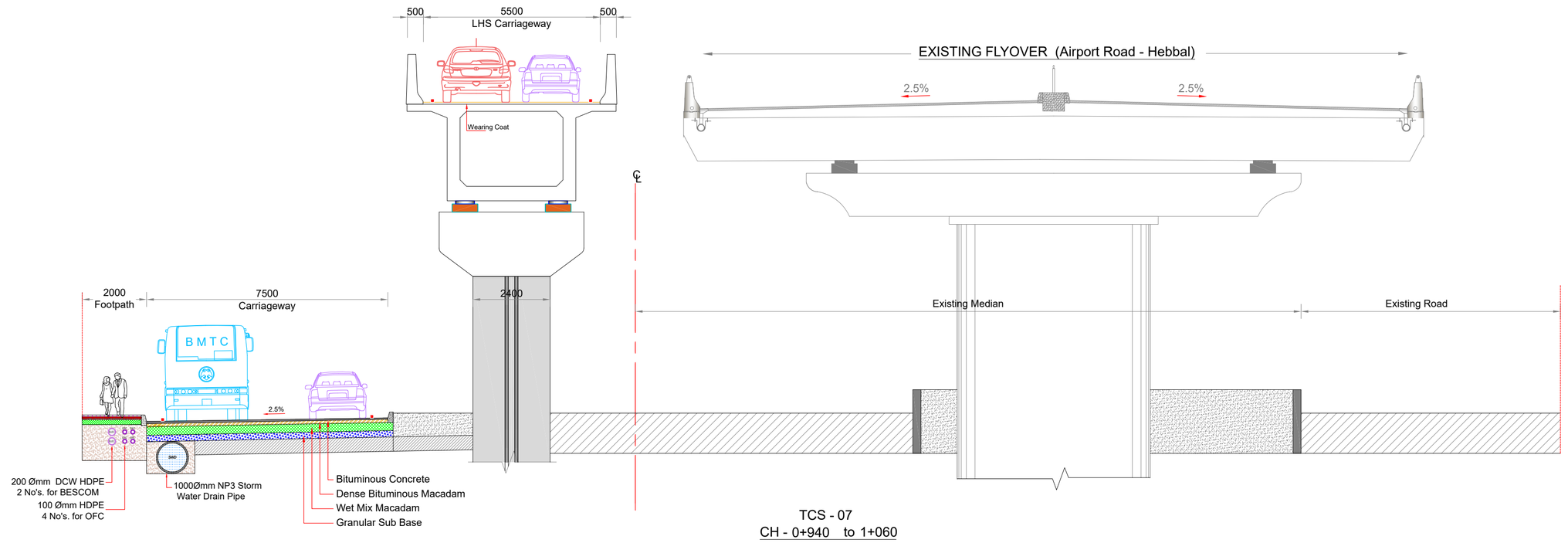

TCS - 07
CH - 0+940 to 1+060

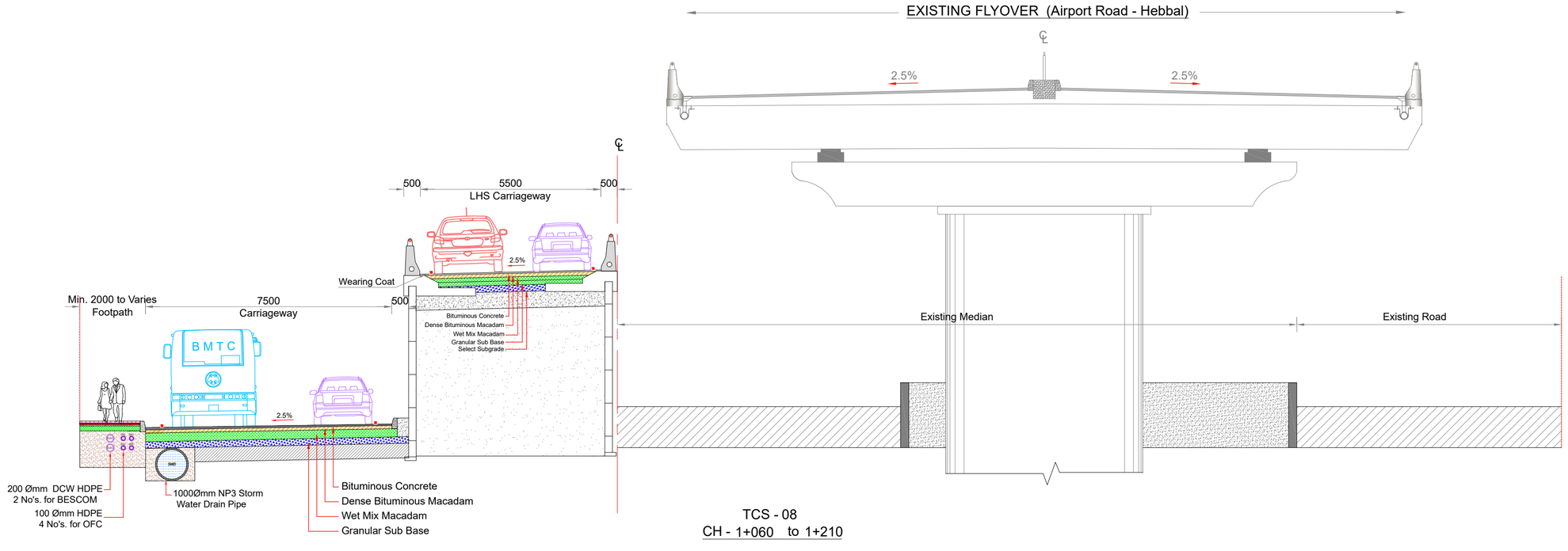

TCS - 08
CH - 1+060 to 1+210

SI NO.	DESCRIPTION	REVISION.	BY	DATE

RELEASED FOR
- ☒ Draft Detailed Project Report
- ☐ Detailed Project Report
- ☐ TENDER

CLIENT :

Bengaluru Smart Infrastructure Limited
Office of the Project Engineer-1, B-Smile,
Room No.108, 1st Floor, Annexe-2 Building,
N.R.Square, BBMP Bengaluru-560002

CONSULTANT:
Infra Support
Your Complete Engineering Partner
INFRA SUPPORT ENGINEERING CONSULTANTS PVT. LTD
An ISO 9001-2015 Certified Company
Infra House, #456/11/1, Hennur Bande,
Hennur Bagalur Main Road, Kalyan Nagar,
Bangalore - 560 043.
Phone: +91 91 48192837
Email: info@infrasupport.in www.infrasupport.in

DRAWN	SK	PROJECT:	Draft Detailed Project Report (DDPR) for Construction of Elevated Corridors of Package - 3
DESIGNED	NNK	NAME OF WORK	Construction of Grade Separator at Kempegowda Circle Old Yelahanka
CHECKED	TRL		
DATE	Sep - 2025	TITLE :	Typical Cross Section
SHEET	04 of 04	SCALE:	As shown

JOB NO. 2501
DRG. NO. : IS \ 2501 \ HIG \TCS - 04
REVISION R0

192.168.2.207\assetmgt\Projects\PKG PROJECT\140 Elevated Corridors\Package-2 Draft DPR\PACKAGE-3\Title Sheet P3.dwg

CONSTRUCTION OF GRADE SEPARATOR AT KEMPEGOWDA CIRCLE OLD YELAHANKA

Yelahanka

Kogilu Cross

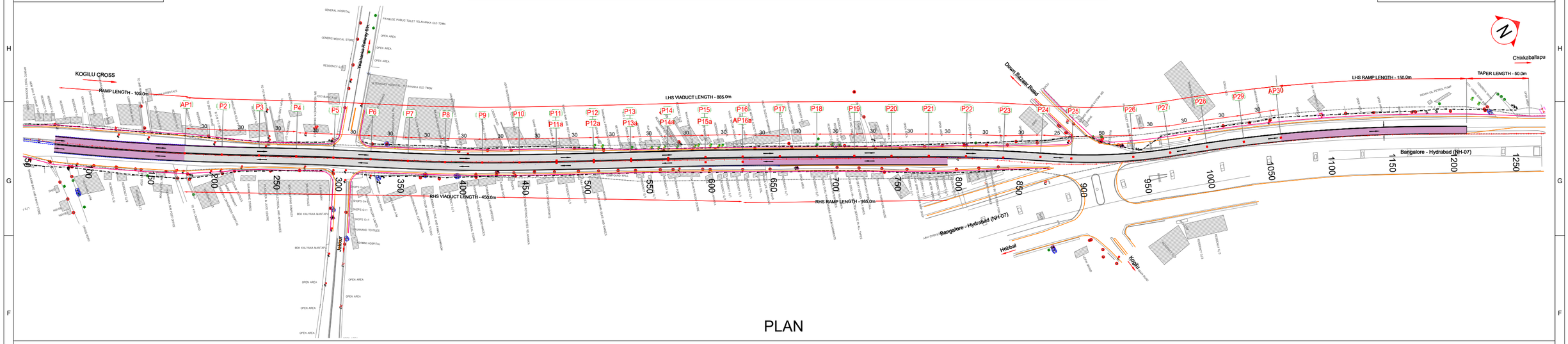
KOGILU CROSS
RAMP LENGTH - 105.0m
LHS VIADUCT LENGTH - 885.0m
RHS VIADUCT LENGTH - 450.0m
RHS RAMP LENGTH - 165.0m
LHS RAMP LENGTH - 150.0m
TAPER LENGTH - 50.0m
Down Bazaar Road
Bangalore - Hydrabad (NH-07)
Hebbal
Kogilu
Chikkaballapu
Yelahanka Railway Stn.
Jakkur
AP1 P2 P3 P4 P5 P6 P7 P8 P9 P10 P11 P11a P12 P12a P13 P13a P14 P14a P15 P15a AP16 AP16a P17 P18 P19 P20 P21 P22 P23 P24 P25 P26 P27 P28 P29 AP30

PLAN

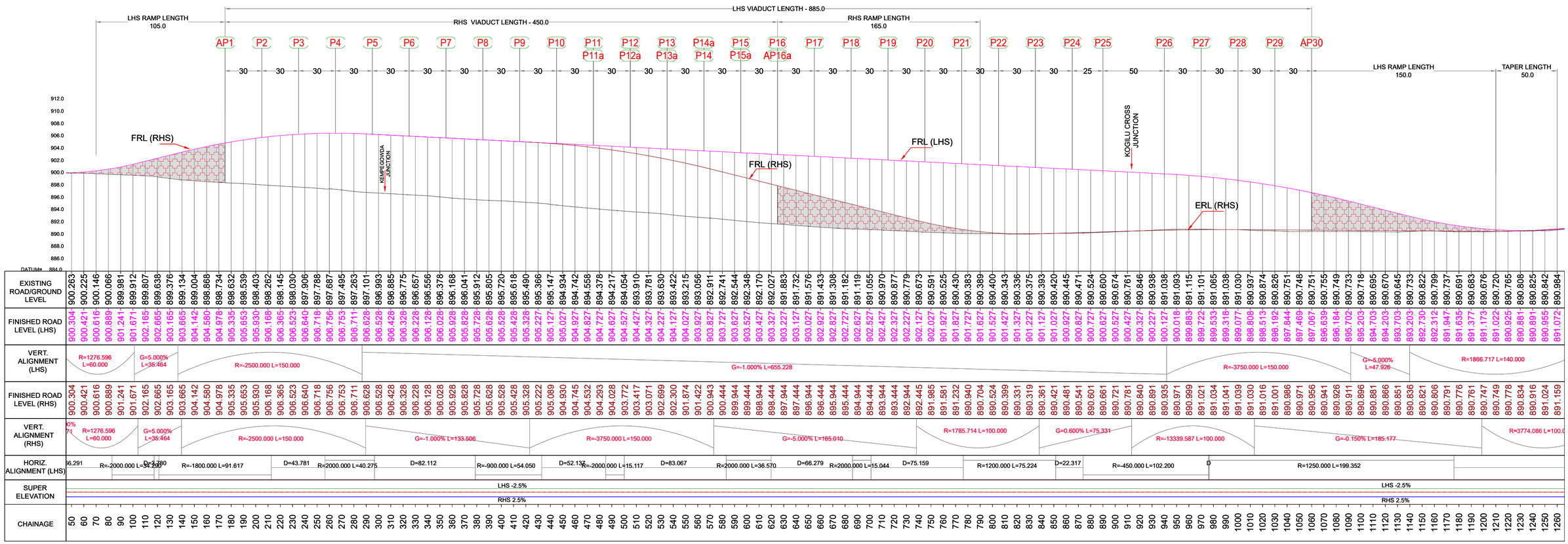

PROFILE

SI NO.	DESCRIPTION	REVISION.	BY	DATE

RELEASED FOR

- ▨ Draft Detailed Project Report
- ☐ Detailed Project Report
- ☐ TENDER

CLIENT :

Bengaluru Smart Infrastructure Limited
Office of the Project Engineer-1, B-Smile,
Room No.108, 1st Floor, Annexe-2 Building,
N.R.Square, BBMP Bengaluru-560002

CONSULTANT:

Infra Support
Your Complete Engineering Partner

INFRA SUPPORT ENGINEERING CONSULTANTS PVT. LTD
An ISO 9001-2015 Certified Company
Infra House, #456/11/1, Hennur Bande,
Hennur Bagalur Main Road, Kalyan Nagar,
Bangalore - 560 043.
Phone: +91 91 48192837
Email: info@infrasupport.in www.infrasupport.in

DRAWN	SK	PROJECT:	Draft Detailed Project Report (DDPR) for Construction of Elevated Corridors of Package - 3
DESIGNED	NNK	NAME OF WORK	Construction of Grade Separator at Kempegowda Circle Old Yelahanka
CHECKED	TRL		JOB NO. 2501
DATE	Sep - 2025	TITLE :	Plan and Profile
SHEET	01 of 01	SCALE:	As shown
		DRG. NO. :	IS \ 2501 \ HIG \PP - 01
			REVISION R0

This drawing is property of Infra Support Engineering Consultants Pvt. Ltd. Reproduction or use without permission is prohibited.

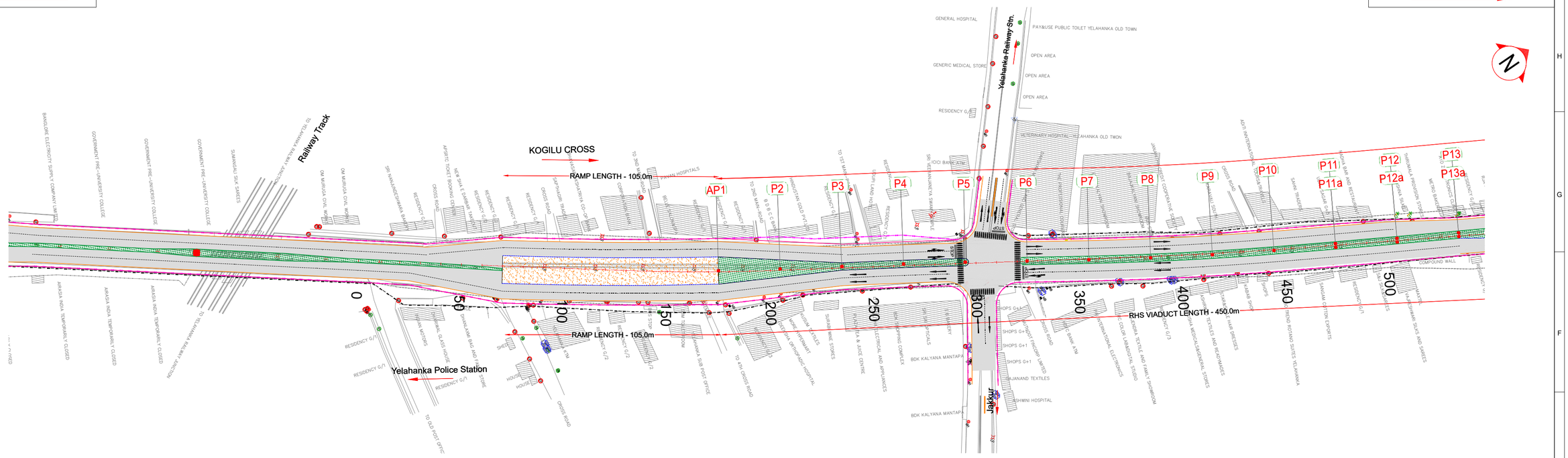

AT-GRADE PLAN

SI NO.	DESCRIPTION	REVISION.	BY	DATE

RELEASED FOR

- ▨ Draft Detailed Project Report
- ☐ Detailed Project Report
- ☐ TENDER

CLIENT :

Bengaluru Smart Infrastructure Limited
Office of the Project Engineer-1, B-Smile,
Room No.108, 1st Floor, Annexe-2 Building,
N.R.Square, BBMP Bengaluru-560002

CONSULTANT:
Infra Support
Your Complete Engineering Partner
INFRA SUPPORT ENGINEERING CONSULTANTS PVT. LTD
An ISO 9001-2015 Certified Company
Infra House, #456/11/1, Hennur Bande,
Hennur Bagalur Main Road, Kalyan Nagar,
Bangalore - 560 043.
Phone: +91 91 48192837
Email: info@infrasupport.in www.infrasupport.in

DRAWN	SK	PROJECT:	Draft Detailed Project Report (DDPR) for Construction of Elevated Corridors of Package - 3
DESIGNED	NNK	NAME OF WORK	Construction of Grade Separator at Kempegowda Circle Old Yelahanka
CHECKED	TRL		
DATE	Sep - 2025	TITLE :	At-Grade Plan
SHEET	01 of 01	SCALE:	As shown

JOB NO. 2501

REVISION R0

DRG. NO. : IS \ 2501 \ HIG \AG- 01

STRUCTURE DRAWING

SUPER STRUCTURE

YELAHANKA POLICE STATION

KOGILU CROSS

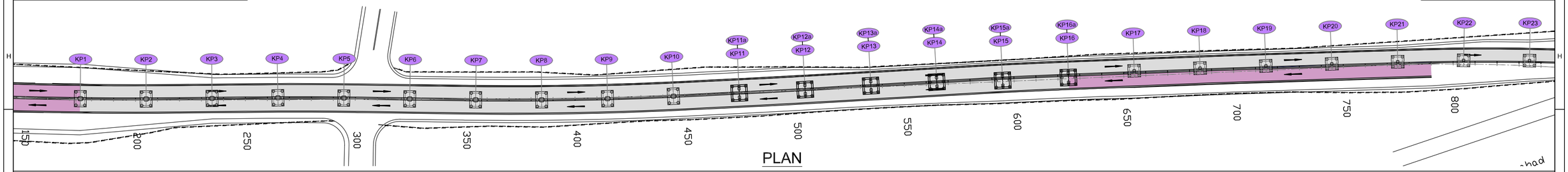

PLAN

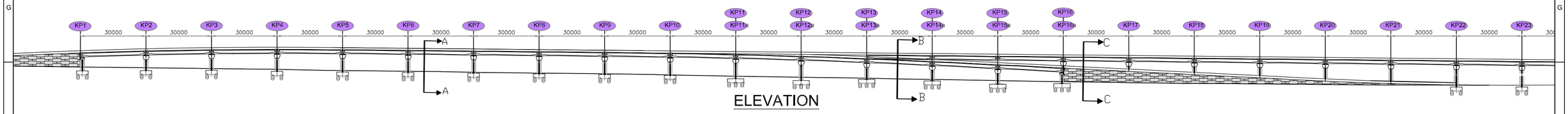

ELEVATION

CHAINAGE	0+175	0+205	0+235	0+265	0+295	0+325	0+355	0+385	0+415	0+445	0+475	0+505	0+535	0+565	0+595	0+625	0+655	0+685	0+715	0+745	0+775	0+805	0+835
LHS-FRL	905.157	906.049	906.582	906.759	906.577	906.277	905.977	905.677	905.377	905.077	904.777	904.477	904.177	903.877	903.577	903.277	902.977	902.677	902.377	902.077	901.777	901.477	901.177
LHS-EGL	898.682	898.333	897.967	897.609	897.047	896.718	896.273	895.848	895.554	895.034	894.467	893.975	893.526	892.984	892.447	891.955	891.498	891.151	890.924	890.631	890.389	890.372	890.385
RHS-FRL	905.157	906.049	906.582	906.759	906.579	906.279	905.979	905.679	905.379	905.010	904.413	903.577	902.500	901.183	899.694	898.194							
RHS-EGL	898.682	898.333	897.967	897.609	897.047	896.718	896.273	895.848	895.554	895.034	894.467	893.975	893.526	892.984	892.447	891.955							

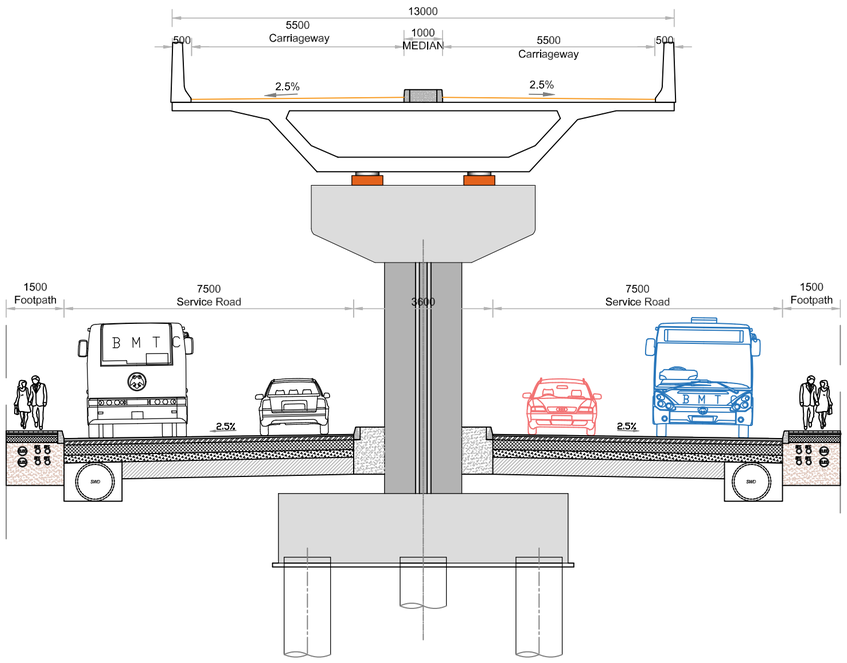

SECTION A-A

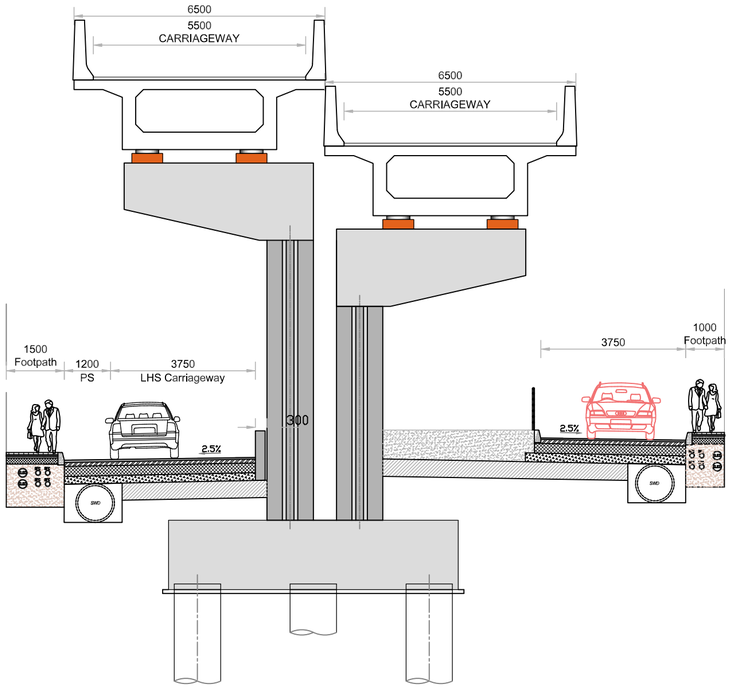

SECTION B-B

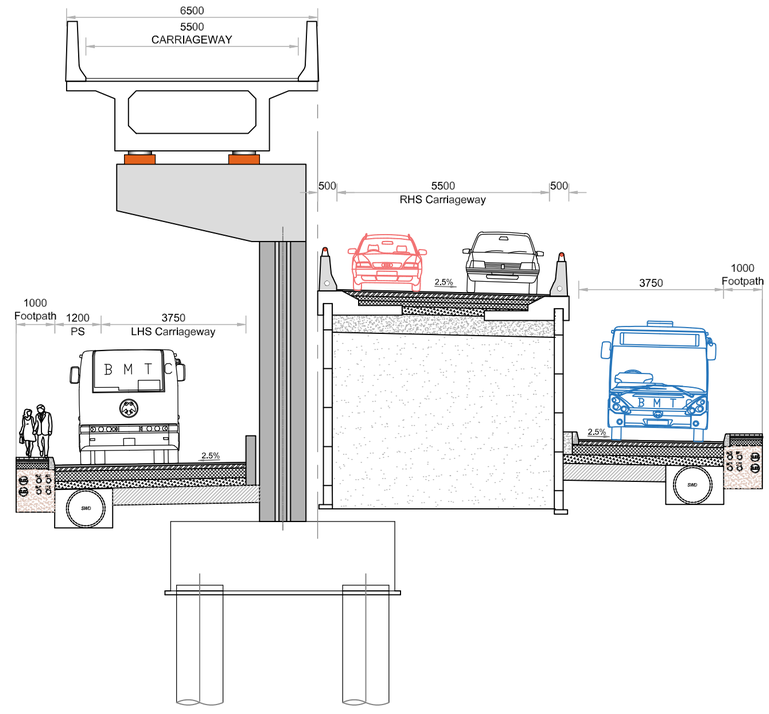

SECTION C-C

SI NO.	DESCRIPTION	REVISION.	BY	DATE

RELEASED FOR

- ☒ Draft Detailed Project Report
- ☐ Detailed Project Report
- ☐ TENDER

CLIENT :

Bengaluru Smart Infrastructure Limited
Office of the Project Engineer-1, B-Smile,
Room No.108, 1st Floor, Annexe-2 Building,
N.R.Square, BBMP Bengaluru-560002

CONSULTANT:

Infra Support
Your Complete Engineering Partner

INFRA SUPPORT ENGINEERING CONSULTANTS PVT. LTD
An ISO 9001-2015 Certified Company
Infra House, #456/11/1, Hennur Bande,
Hennur Bagalur Main Road, Kalyan Nagar,
Bangalore - 560 043.
Phone: +91 80 25421364
Email: info@infrasupport.in www.infrasupport.in

DRAWN	CDS	PROJECT:	Detail Project Report (DPR) for Construction of Elevated Corridors for Package 3		
DESIGNED	RV	NAME OF WORK	Construction of Grade Separator at Kempegowda Circle Old Yelahanka	JOB NO.	2501
CHECKED	TRL	TITLE :	GENERAL ARRANGEMENT DRAWING Ch :0+000 to 0+400	REVISION	R0
DATE	Sep - 2025	SCALE:	As shown	DRG. NO. : IS \ 2501 \ STR \GAD- 01	
SHEET	01 of 02				

YELAHANKA POLICE STATION

KOGILU CROSS

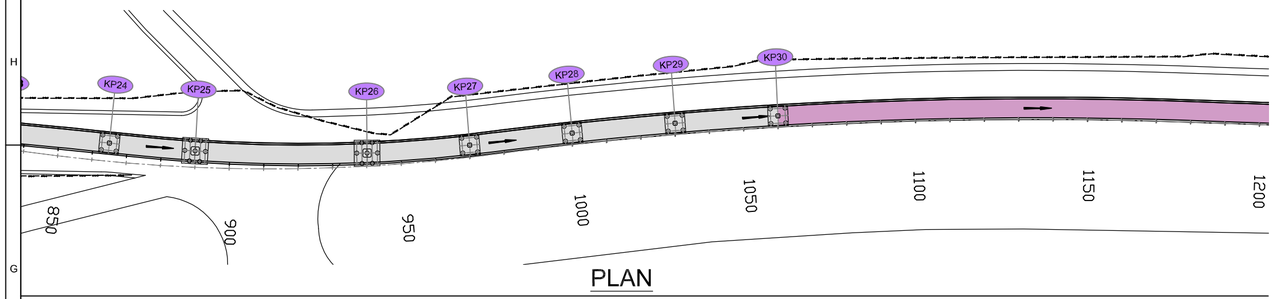

PLAN

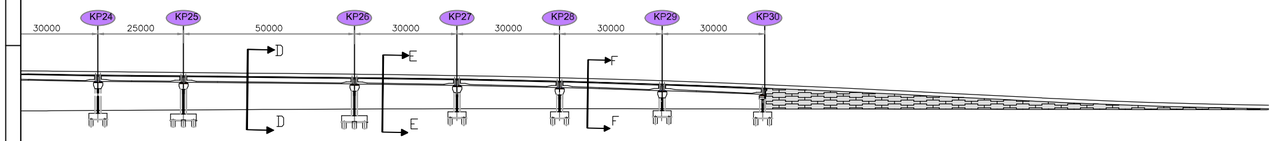

ELEVATION

CHAINAGE	0+865	0+890	0+940	0+970	1+000	1+030	1+060
LHS-FRL	900.877	900.627	900.127	899.722	899.077	898.192	897.067
LHS-EGL	890.458	890.600	891.039	891.102	891.030	890.827	890.752

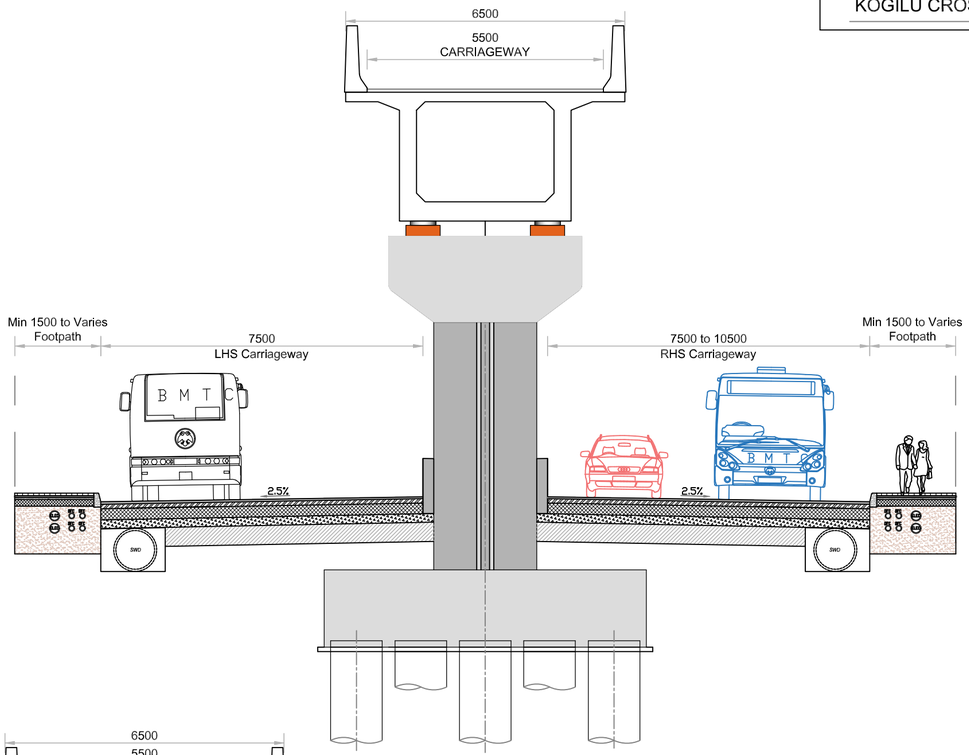

SECTION D-D

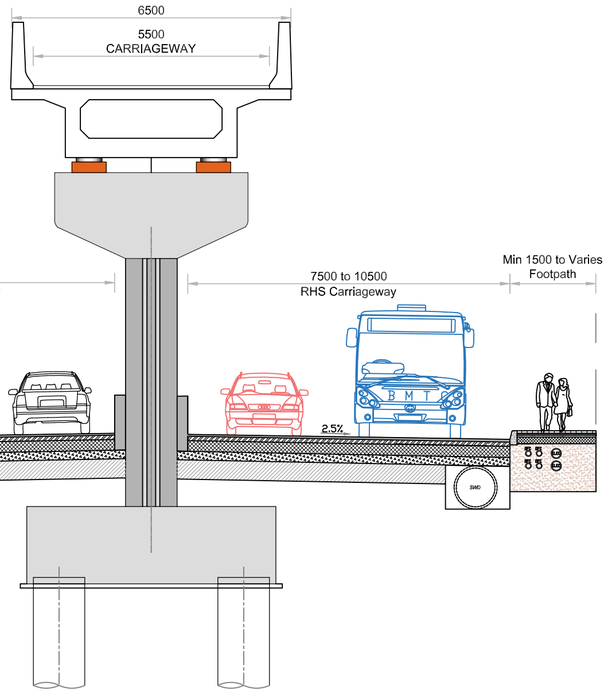

SECTION E-E

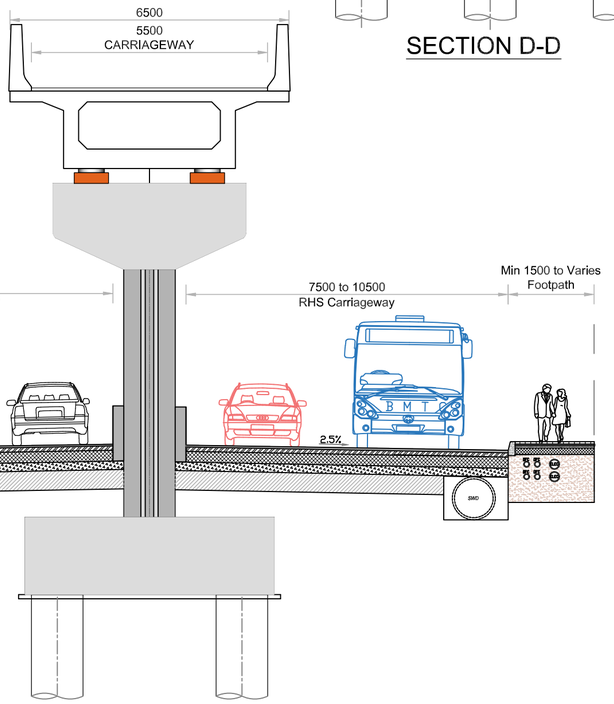

SECTION F-F

SI NO.	DESCRIPTION	REVISION.	BY	DATE

RELEASED FOR

- ▨ Draft Detailed Project Report
- ☐ Detailed Project Report
- ☐ TENDER

CLIENT :

Bengaluru Smart Infrastructure Limited
Office of the Project Engineer-1, B-Smile,
Room No.108, 1st Floor, Annexe-2 Building,
N.R.Square, BBMP Bengaluru-560002

CONSULTANT:

Infra Support
Your Complete Engineering Partner

INFRA SUPPORT ENGINEERING CONSULTANTS PVT. LTD
An ISO 9001-2015 Certified Company
Infra House, #456/11/1, Hennur Bande,
Hennur Bagalur Main Road, Kalyan Nagar,
Bangalore - 560 043.
Phone: +91 80 25421364
Email: info@infrasupport.in www.infrasupport.in

DRAWN	CDS	PROJECT:	Detail Project Report (DPR) for Construction of Elevated Corridors for Package 3		
DESIGNED	RV	NAME OF WORK	Construction of Grade Separator at Kempegowda Circle Old Yelahanka	JOB NO.	2501
CHECKED	TRL				
DATE	Sep - 2025	TITLE :	GENERAL ARRANGEMENT DRAWING Ch :0+000 to 0+400	REVISION	R0
SHEET	02 of 02	SCALE:	As shown	DRG. NO. : IS \ 2501 \ STR \GAD - 02	

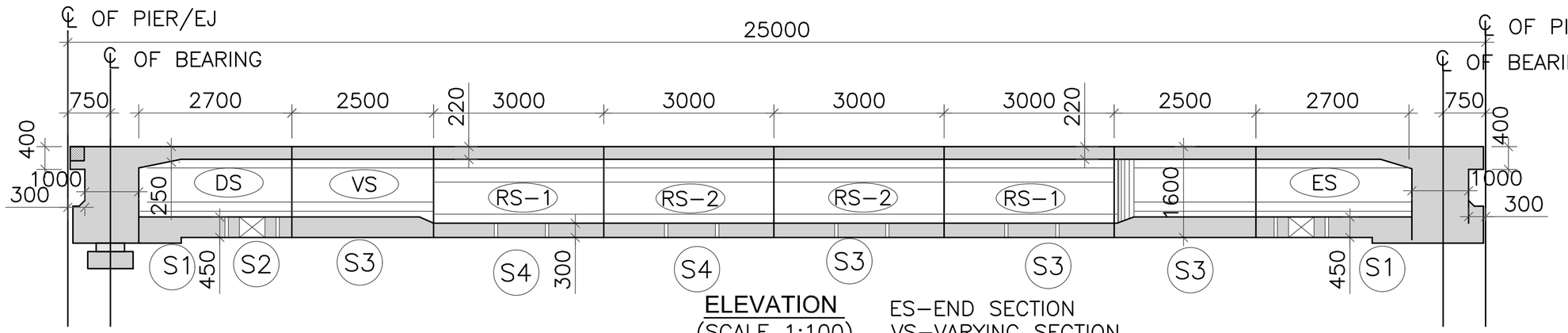

ELEVATION
(SCALE 1:100)

ES–END SECTION
VS–VARYING SECTION
RS–RUNNING SECTION

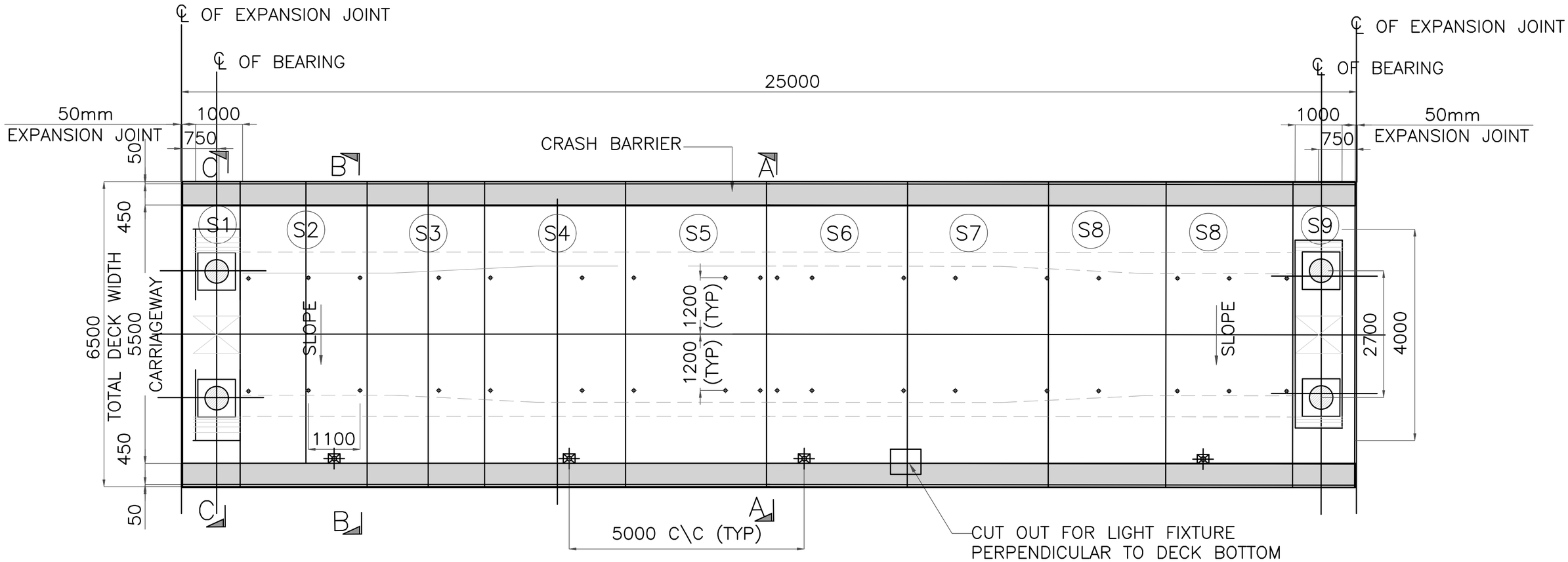

PLAN AT DECK SLAB LEVEL
(SCALE 1:100)

Sl NO.	DESCRIPTION	REVISION.	BY	DATE

RELEASED FOR
- ▨ Draft Detailed Project Report
- ☐ Detailed Project Report
- ☐ TENDER

CLIENT :
Bengaluru Smart Infrastructure Limited
Office of the Project Engineer-1, B-Smile,
Room No.108, 1st Floor, Annexe-2 Building,
N.R.Square, BBMP Bengaluru-560002

CONSULTANT:
Infra Support
Your Complete Engineering Partner
INFRA SUPPORT ENGINEERING CONSULTANTS PVT. LTD
An ISO 9001-2015 Certified Company
Infra House, #456/11/1, Hennur Bande,
Hennur Bagalur Main Road, Kalyan Nagar,
Bangalore - 560 043.
Phone: +91 80 25421364
Email: info@infrasupport.in www.infrasupport.in

DRAWN	CDS	PROJECT:	Detail Project Report (DPR) for Construction of Elevated Corridors for Package 3
DESIGNED	RV	NAME OF WORK	Construction of Grade Separator at Kempegowda Circle Old Yelahanka
CHECKED	TRL		
DATE	Sep - 2025	TITLE :	DIMENSION DETAILS OF 25M SPAN SEGMENTAL BOX SUPERSTRUCTURE FOR 6.5M DECK WIDTH
SHEET	01 OF 01	SCALE:	As shown

JOB NO. 2501
REVISION R0
DRG. NO. : IS \ 2501 \ STR \GAD-01

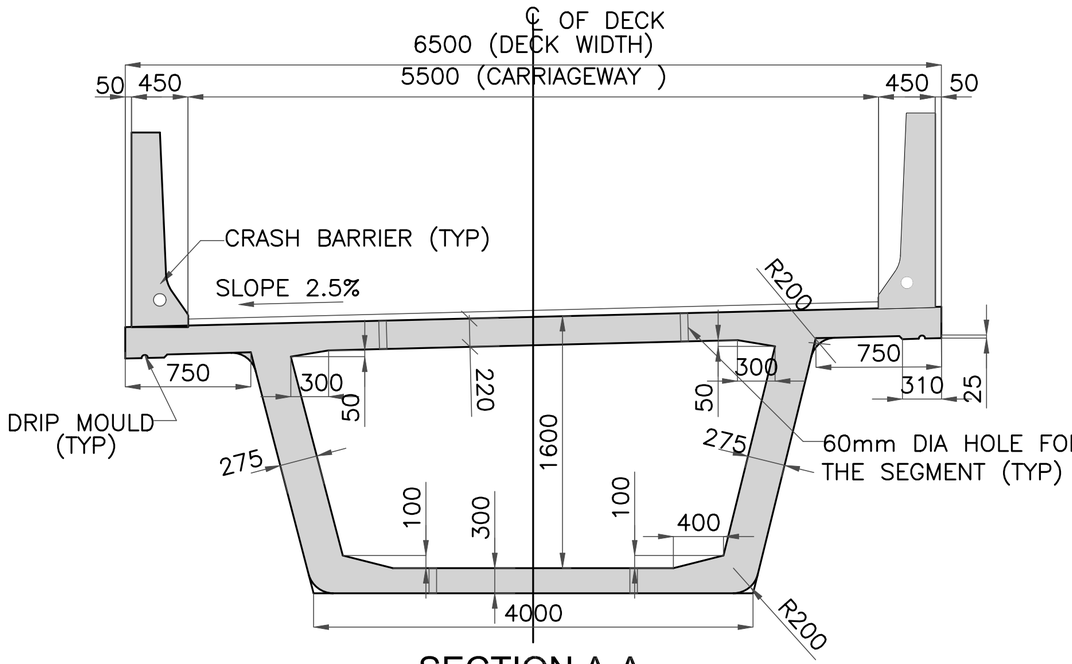

SECTION A-A
MID SECTION
(SCALE 1:50)

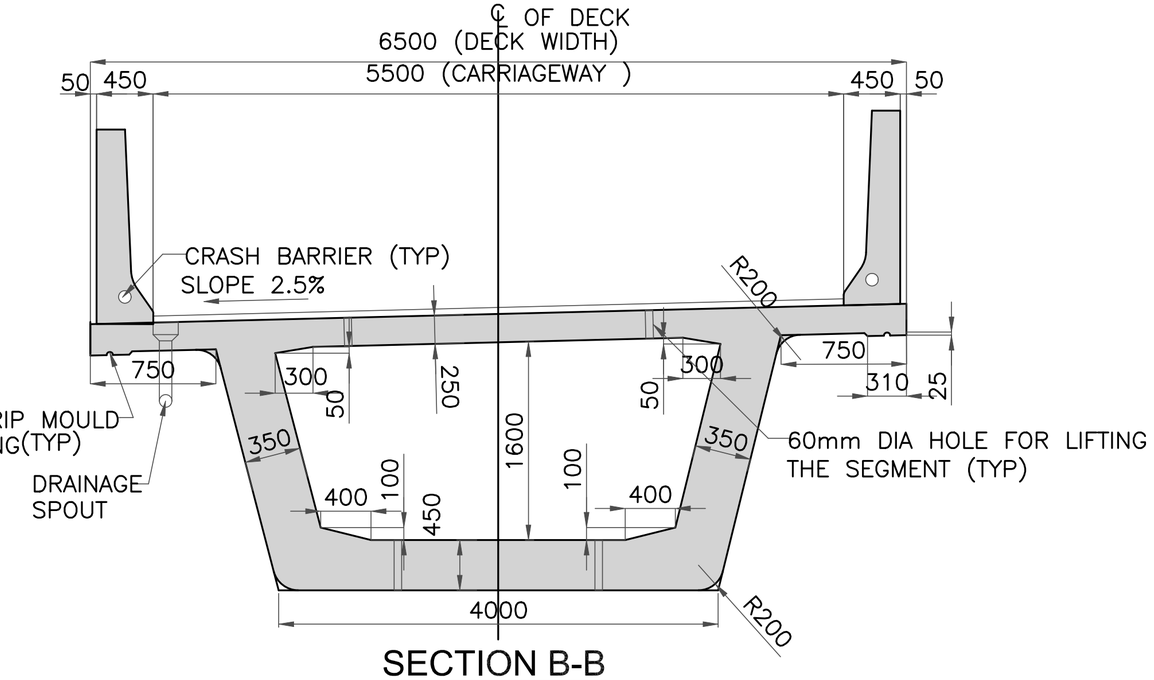

SECTION B-B
END SECTION
(SCALE 1:50)

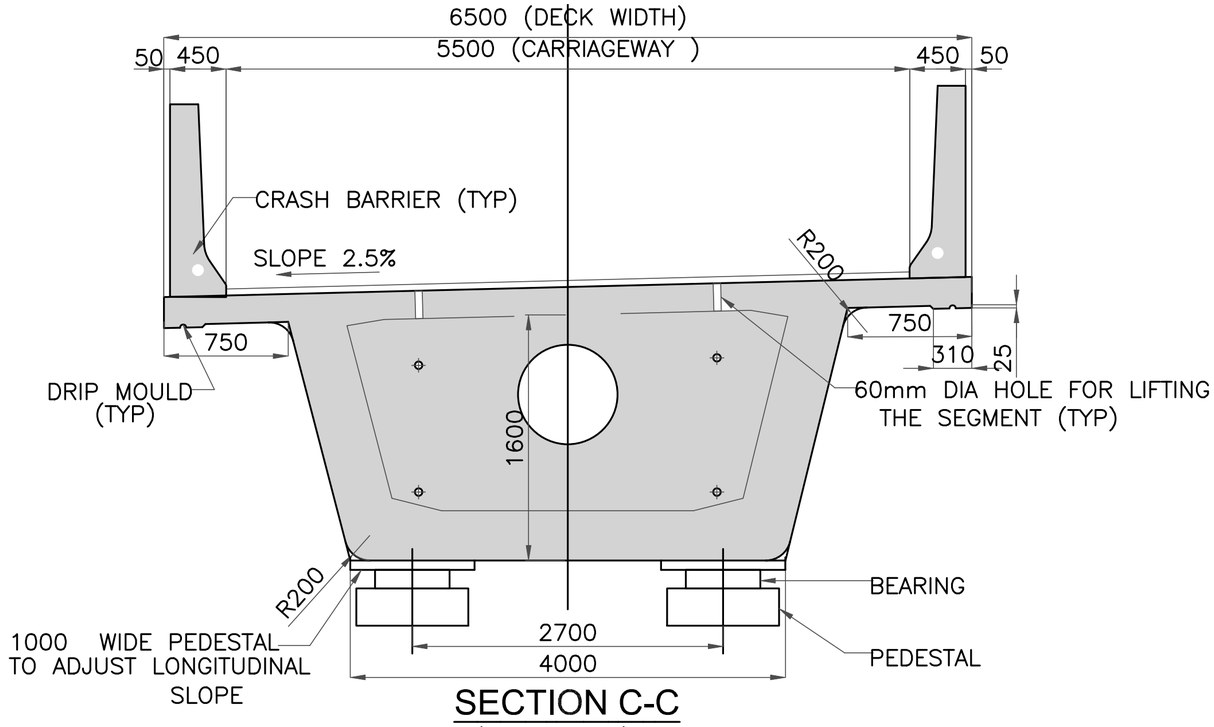

SECTION C-C
(SCALE 1:50)

SI NO.	DESCRIPTION	REVISION.	BY	DATE

RELEASED FOR
- [x] Draft Detailed Project Report
- [ ] Detailed Project Report
- [ ] TENDER

CLIENT :

Bengaluru Smart Infrastructure Limited
Office of the Project Engineer-1, B-Smile,
Room No.108, 1st Floor, Annexe-2 Building,
N.R.Square, BBMP Bengaluru-560002

CONSULTANT:
Infra Support
Your Complete Engineering Partner
INFRA SUPPORT ENGINEERING CONSULTANTS PVT. LTD
An ISO 9001-2015 Certified Company
Infra House, #456/11/1, Hennur Bande,
Hennur Bagalur Main Road, Kalyan Nagar,
Bangalore - 560 043.
Phone: +91 80 25421364
Email: info@infrasupport.in www.infrasupport.in

DRAWN	CDS	PROJECT:	Detail Project Report (DPR) for Construction of Elevated Corridors for Package 3
DESIGNED	RV	NAME OF WORK	Construction of Grade Separator at Kempegowda Circle Old Yelahanka
CHECKED	TRL		
DATE	Sep - 2025	TITLE :	DIMENSION DETAILS OF 25M SPAN SEGMENTAL BOX SUPERSTRUCTURE FOR 6.5M DECK WIDTH
SHEET	01 OF 01	SCALE:	As shown

JOB NO. 2501
DRG. NO. : IS \ 2501 \ STR \GAD-01
REVISION R0

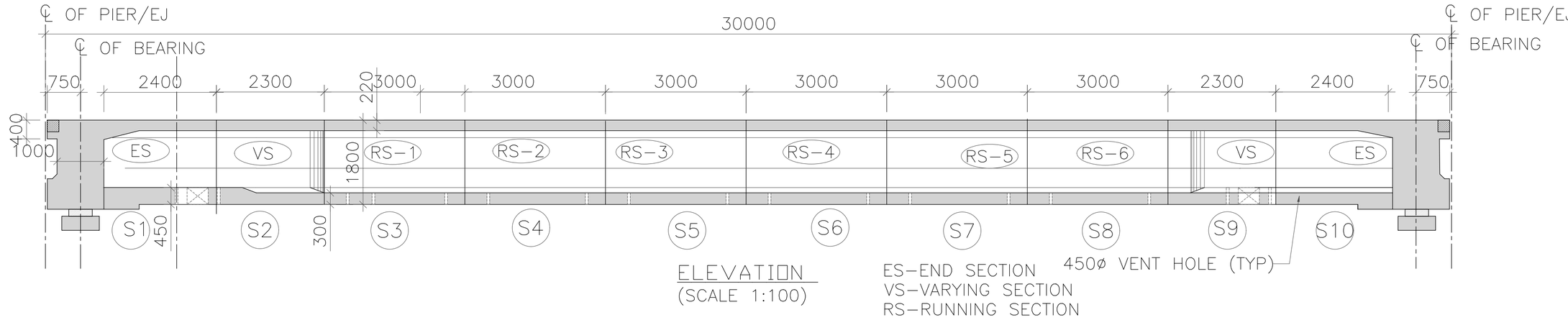

ELEVATION
(SCALE 1:100)

ES–END SECTION
VS–VARYING SECTION
RS–RUNNING SECTION

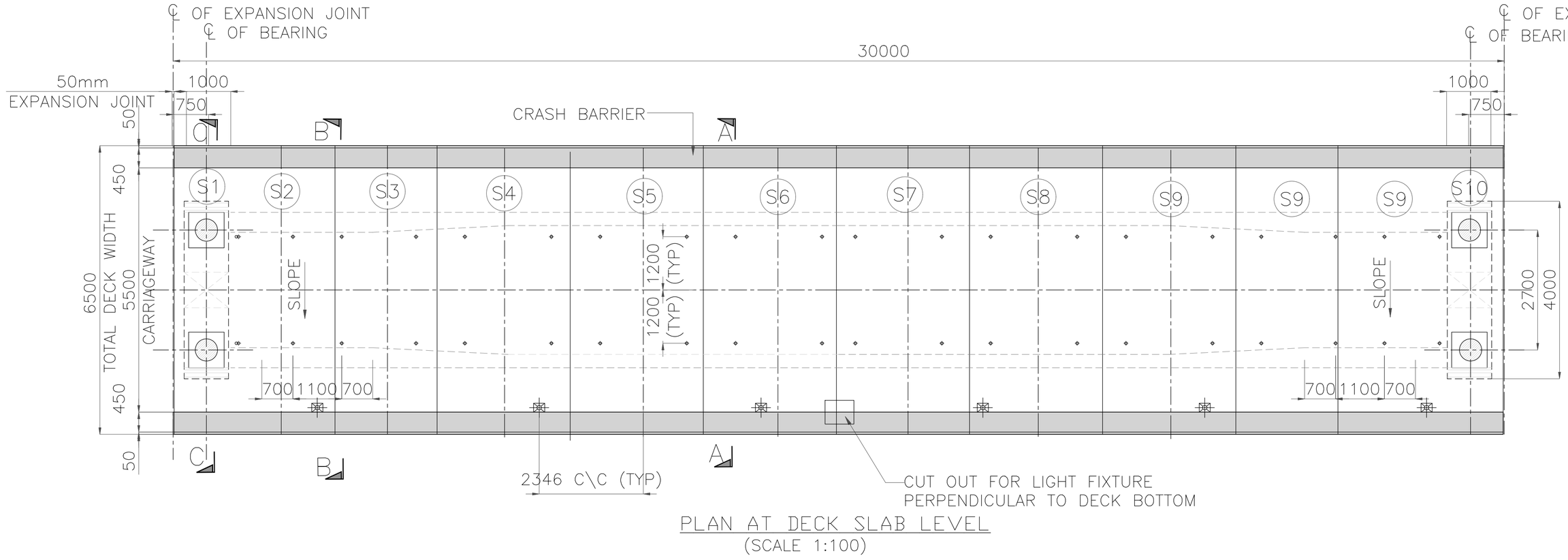

PLAN AT DECK SLAB LEVEL
(SCALE 1:100)

SI NO.	DESCRIPTION	REVISION.	BY	DATE

RELEASED FOR
- ▨ Draft Detailed Project Report
- ☐ Detailed Project Report
- ☐ TENDER

CLIENT :
Bengaluru Smart Infrastructure Limited
Office of the Project Engineer-1, B-Smile,
Room No.108, 1st Floor, Annexe-2 Building,
N.R.Square, BBMP Bengaluru-560002

CONSULTANT:
Infra Support
Your Complete Engineering Partner
INFRA SUPPORT ENGINEERING CONSULTANTS PVT. LTD
An ISO 9001-2015 Certified Company
Infra House, #456/11/1, Hennur Bande,
Hennur Bagalur Main Road, Kalyan Nagar,
Bangalore - 560 043.
Phone: +91 80 25421364
Email: info@infrasupport.in www.infrasupport.in

DRAWN	CDS	PROJECT:	Detail Project Report (DPR) for Construction of Elevated Corridors for Package 3
DESIGNED	RV	NAME OF WORK	Construction of Grade Separator at Kempegowda Circle Old Yelahanka
CHECKED	TRL		
DATE	Sep - 2025	TITLE :	DIMENSION DETAILS OF 30M SPAN SEGMENTAL BOX SUPERSTRUCTURE FOR 6.5M DECK WIDTH
SHEET	01 OF 01	SCALE:	As shown
		DRG. NO. :	IS \ 2501 \ STR \ GAD-01

JOB NO. 2501
REVISION R0

DIMENSION DETAILS OF SUPER STRUCTURE -PSC 'BOX' GIDER OF 25m SPAN for 6.5m DECK

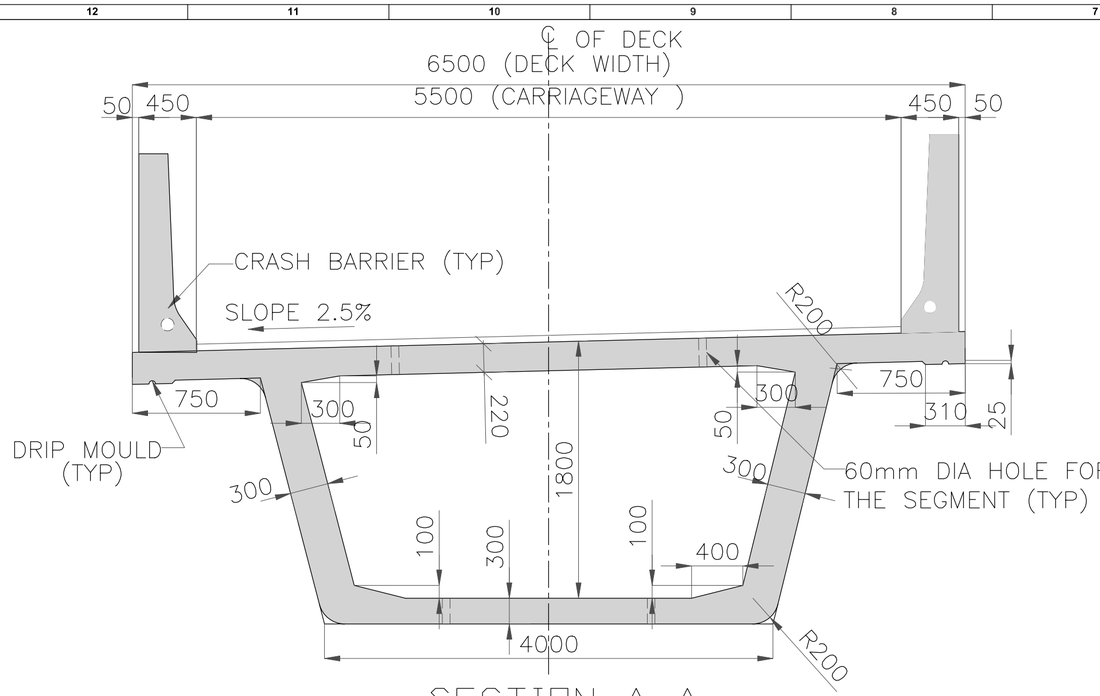

SECTION A-A
MID SECTION
(SCALE 1:50)

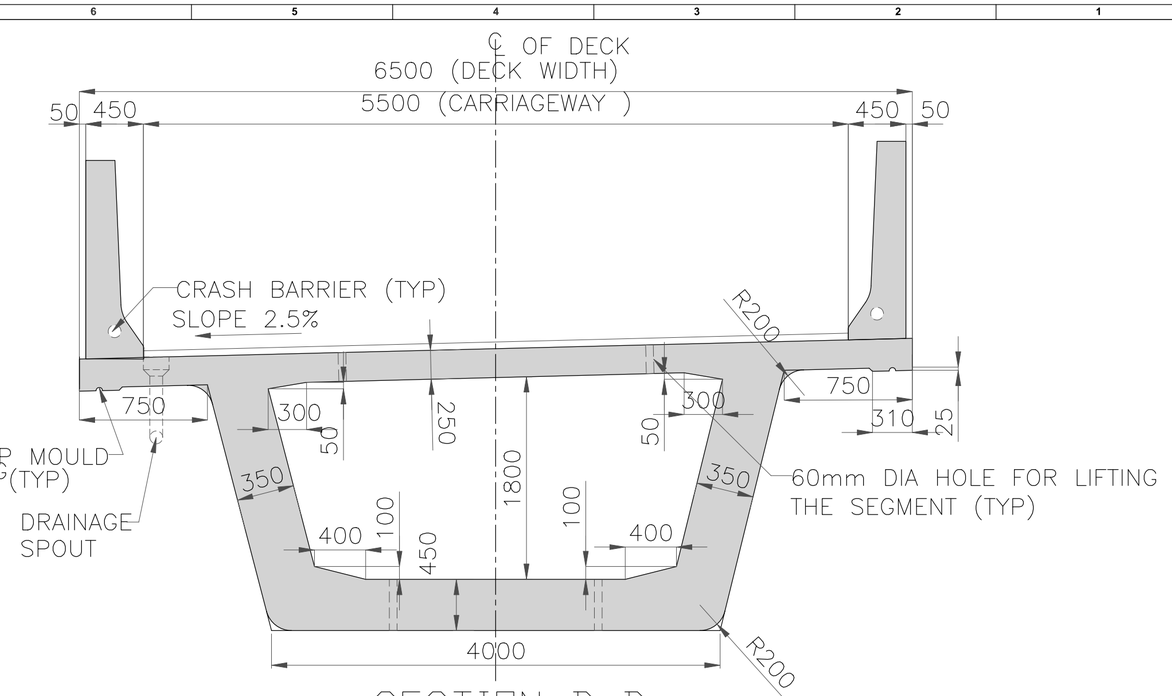

SECTION B-B
END SECTION
(SCALE 1:50)

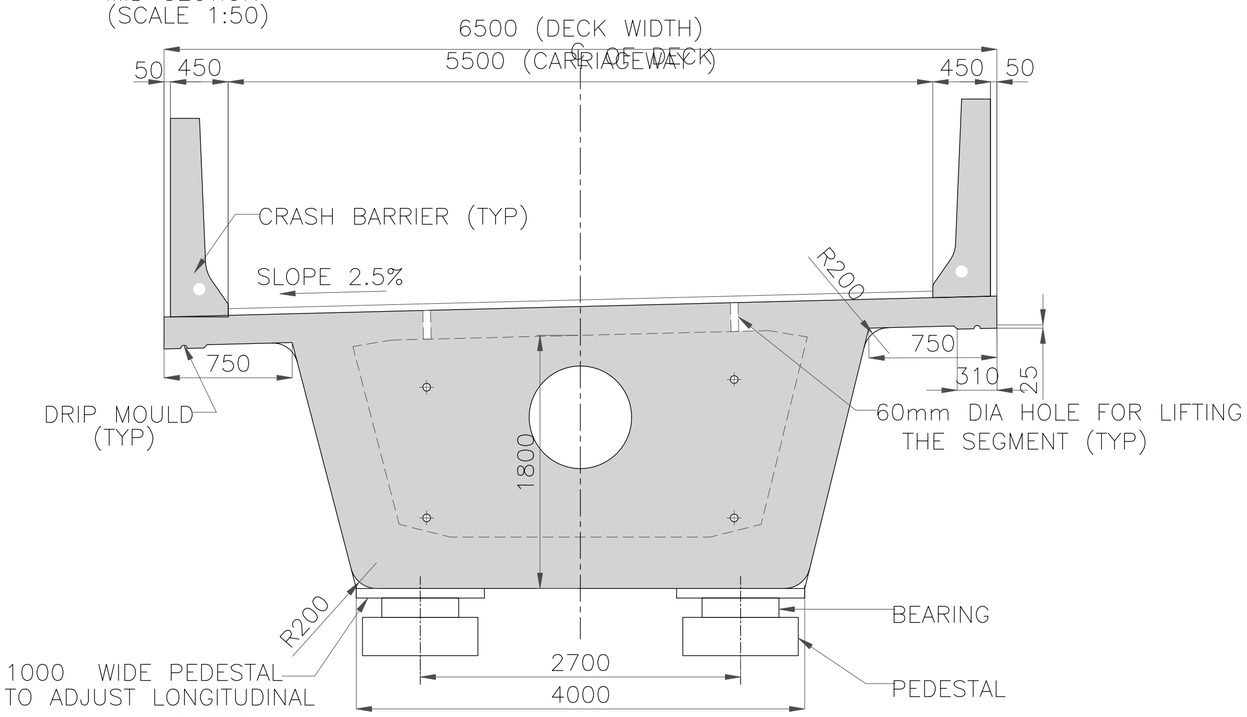

SECTION C-C
(SCALE 1:50)

SI NO.	DESCRIPTION	REVISION.	BY	DATE

RELEASED FOR
- Draft Detailed Project Report
- Detailed Project Report
- TENDER

CLIENT :
Bengaluru Smart Infrastructure Limited
Office of the Project Engineer-1, B-Smile,
Room No.108, 1st Floor, Annexe-2 Building,
N.R.Square, BBMP Bengaluru-560002

CONSULTANT:
Infra Support
Your Complete Engineering Partner
INFRA SUPPORT ENGINEERING CONSULTANTS PVT. LTD
An ISO 9001-2015 Certified Company
Infra House, #456/11/1, Hennur Bande,
Hennur Bagalur Main Road, Kalyan Nagar,
Bangalore - 560 043.
Phone: +91 80 25421364
Email: info@infrasupport.in www.infrasupport.in

DRAWN	CDS	PROJECT:	Detail Project Report (DPR) for Construction of Elevated Corridors for Package 3
DESIGNED	RV	NAME OF WORK	Construction of Grade Separator at Kempegowda Circle Old Yelahanka
CHECKED	TRL		
DATE	Sep - 2025	TITLE :	DIMENSION DETAILS OF 30M SPAN SEGMENTAL BOX SUPERSTRUCTURE FOR 6.5M DECK WIDTH
SHEET	01 OF 01	SCALE: As shown	DRG. NO. : IS \ 2501 \ STR \ GAD-01

JOB NO. 2501
REVISION R0

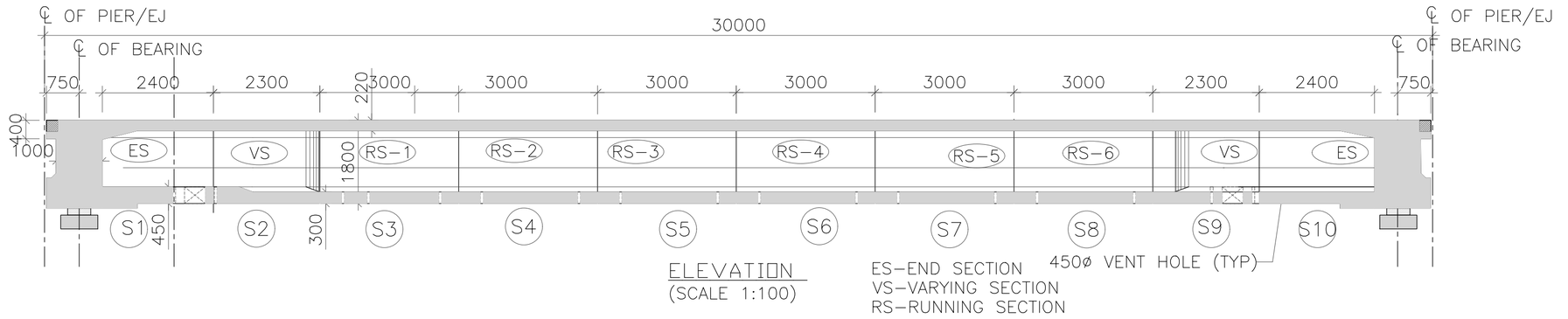

ELEVATION
(SCALE 1:100)

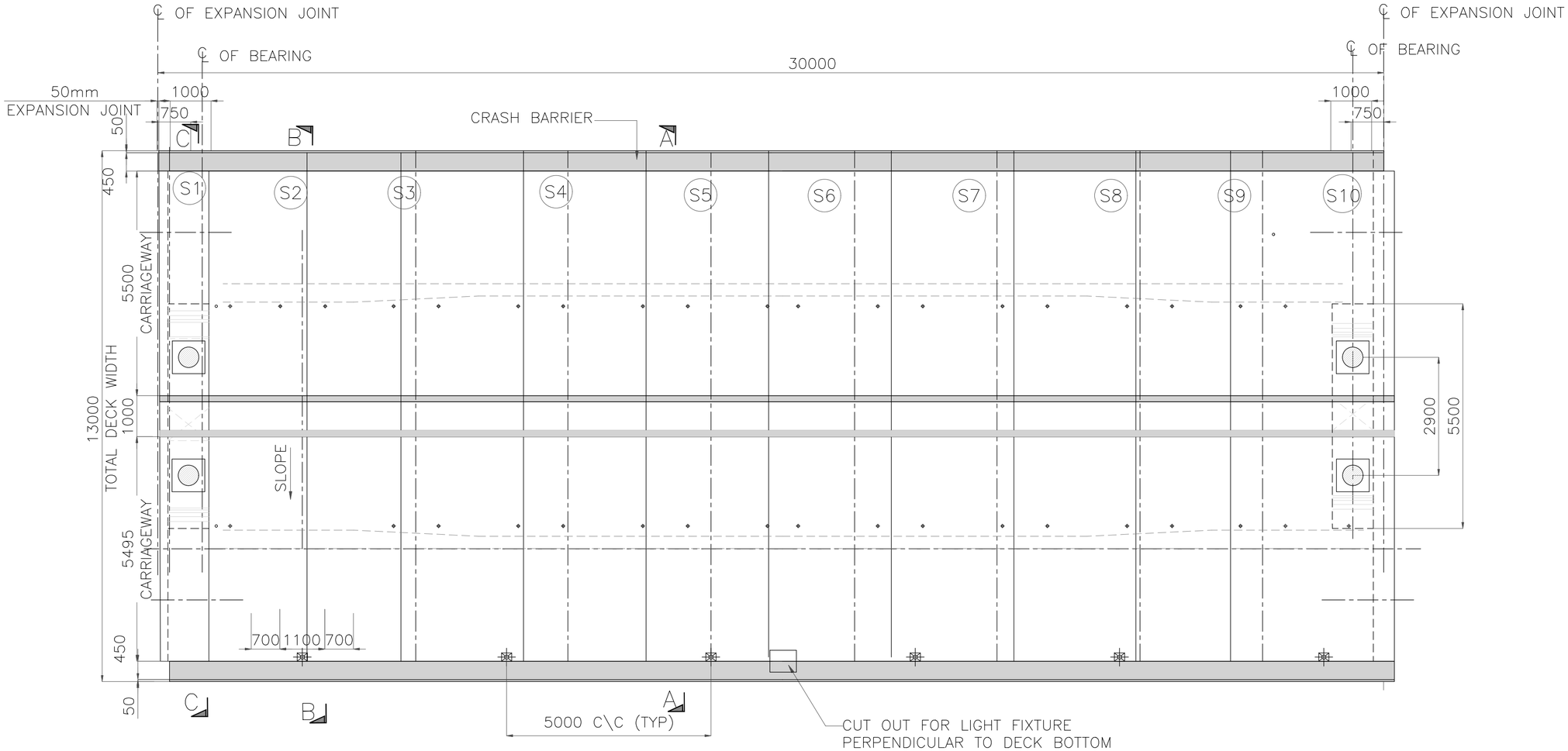

PLAN AT DECK SLAB LEVEL
(SCALE 1:100)

SI NO.	DESCRIPTION	REVISION.	BY	DATE

RELEASED FOR
- ☒ Draft Detailed Project Report
- ☐ Detailed Project Report
- ☐ TENDER

CLIENT :

Bengaluru Smart Infrastructure Limited
Office of the Project Engineer-1, B-Smile,
Room No.108, 1st Floor, Annexe-2 Building,
N.R.Square, BBMP Bengaluru-560002

CONSULTANT:

Infra Support
Your Complete Engineering Partner

INFRA SUPPORT ENGINEERING CONSULTANTS PVT. LTD
An ISO 9001-2015 Certified Company
Infra House, #456/11/1, Hennur Bande,
Hennur Bagalur Main Road, Kalyan Nagar,
Bangalore - 560 043.
Phone: +91 80 25421364
Email: info@infrasupport.in www.infrasupport.in

DRAWN	CDS	PROJECT:	Detail Project Report (DPR) for Construction of Elevated Corridors for Package 3
DESIGNED	RV	NAME OF WORK	Construction of Grade Separator at Kempegowda Circle Old Yelahanka
CHECKED	TRL		
DATE	Sep - 2025	TITLE :	DIMENSION DETAILS OF 30M SPAN SEGMENTAL BOX SUPERSTRUCTURE FOR 13.0M DECK WIDTH
SHEET	01 OF 01	SCALE:	As shown

JOB NO. 2501

DRG. NO. : IS \ 2501 \ STR \GAD-01

REVISION R0

\\Infrasnew\STRUCTURES\2.0\STRUCTURAL DRAWINGS\DPR PROJECTS\BBMP ELEVATED CORRIDOR\Package-3\E-Kempegowda Flyover\Title Sheet P3.dwg

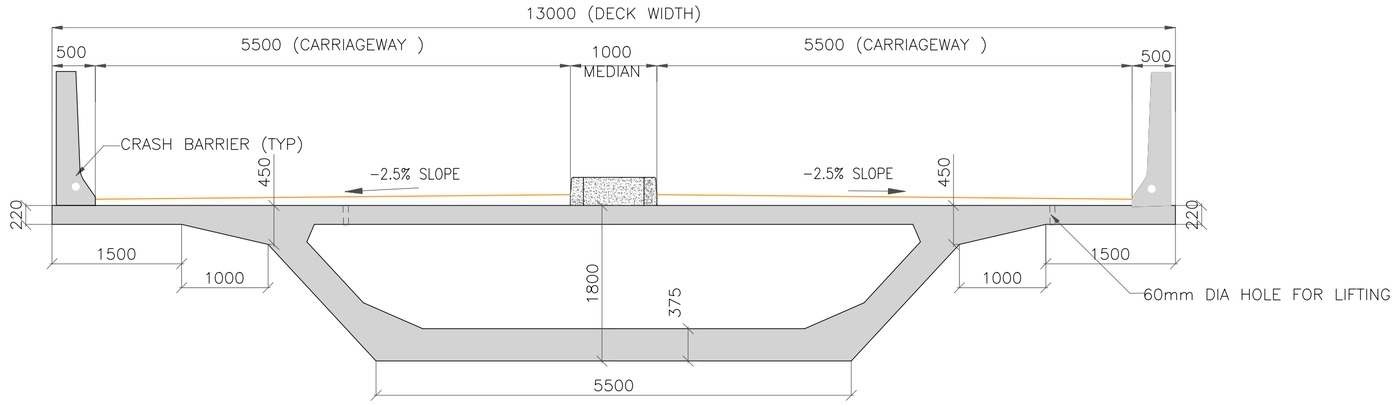

SECTION A-A
MID SECTION
(SCALE 1:50)

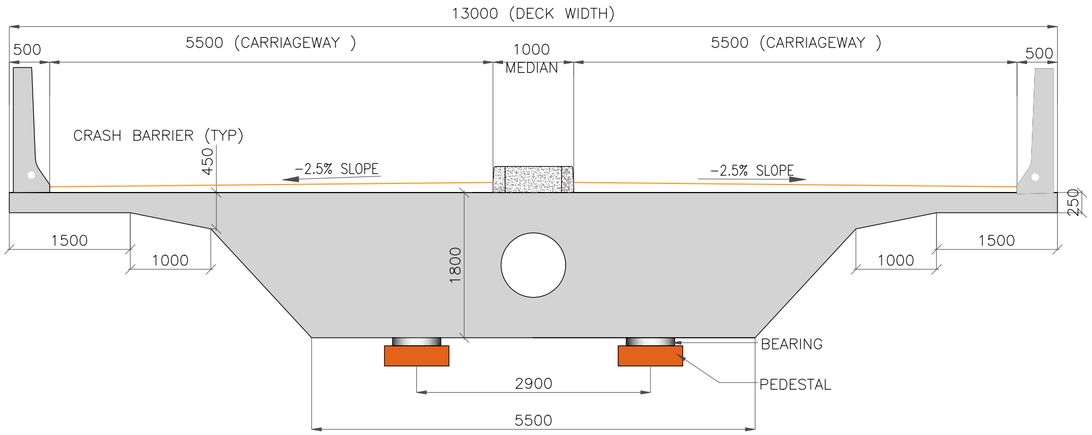

SECTION C-C
(SCALE 1:50)

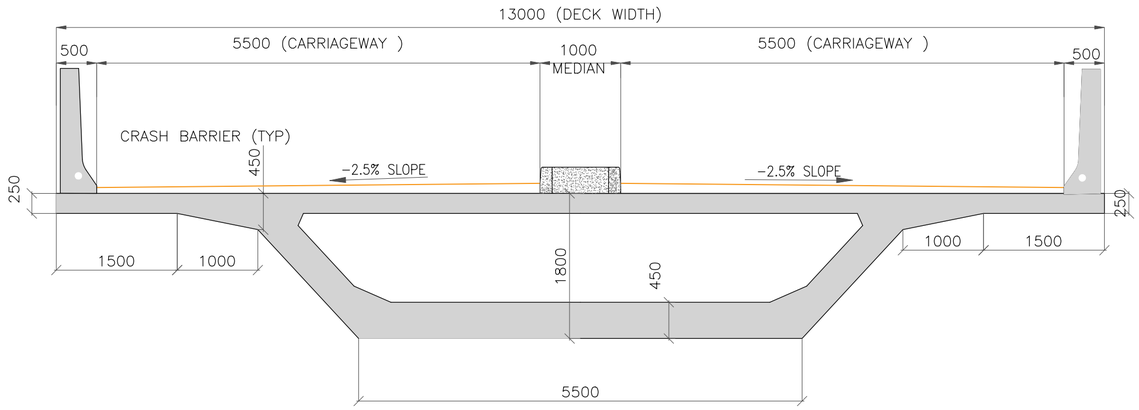

SECTION B-B
END SECTION
(SCALE 1:50)

SI NO.	DESCRIPTION	REVISION.	BY	DATE

RELEASED FOR

- ▨ Draft Detailed Project Report
- ☐ Detailed Project Report
- ☐ TENDER

CLIENT :

Bengaluru Smart Infrastructure Limited
Office of the Project Engineer-1, B-Smile,
Room No.108, 1st Floor, Annexe-2 Building,
N.R.Square, BBMP Bengaluru-560002

CONSULTANT:
Infra Support
Your Complete Engineering Partner
INFRA SUPPORT ENGINEERING CONSULTANTS PVT. LTD
An ISO 9001-2015 Certified Company
Infra House, #456/11/1, Hennur Bande,
Hennur Bagalur Main Road, Kalyan Nagar,
Bangalore - 560 043.
Phone: +91 80 25421364
Email: info@infrasupport.in www.infrasupport.in

DRAWN	CDS	PROJECT:	Detail Project Report (DPR) for Construction of Elevated Corridors for Package 3		
DESIGNED	RV	NAME OF WORK	Construction of Grade Separator at Kempegowda Circle Old Yelahanka	JOB NO.	2501
CHECKED	TRL				
DATE	Sep - 2025	TITLE :	DIMENSION DETAILS OF 30M SPAN SEGMENTAL BOX SUPERSTRUCTURE FOR 13.0M DECK WIDTH	REVISION	R0
SHEET	01 OF 01	SCALE:	As shown	DRG. NO. : IS \ 2501 \ STR \ GAD-01	

\\INFRASHARE\STRUCTURES\2_STRUCTURAL DRAWINGS\DPR PROJECTS\BMRCL ELEVATED CORRIDOR\PACKAGE-3\Kempegowda Flyover\Title Sheet.DWG

DIMENSION DETAILS OF 30M SPAN SEGMENTAL BOX SUPERSTRUCTURE

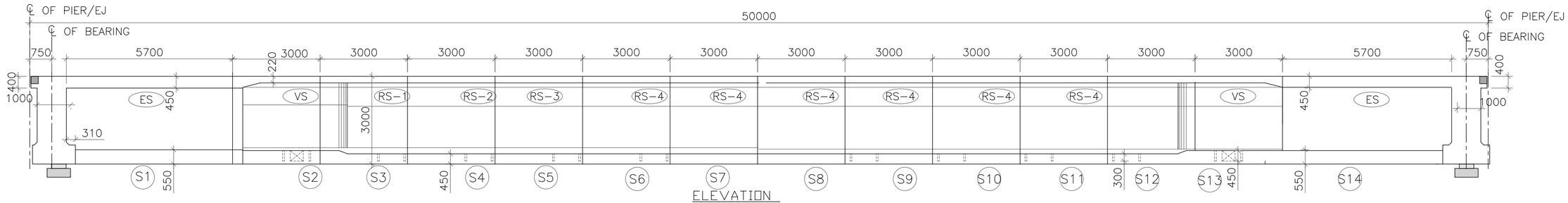

ELEVATION
(SCALE 1:100)

ES-END SECTION
VS VARYING SECTION

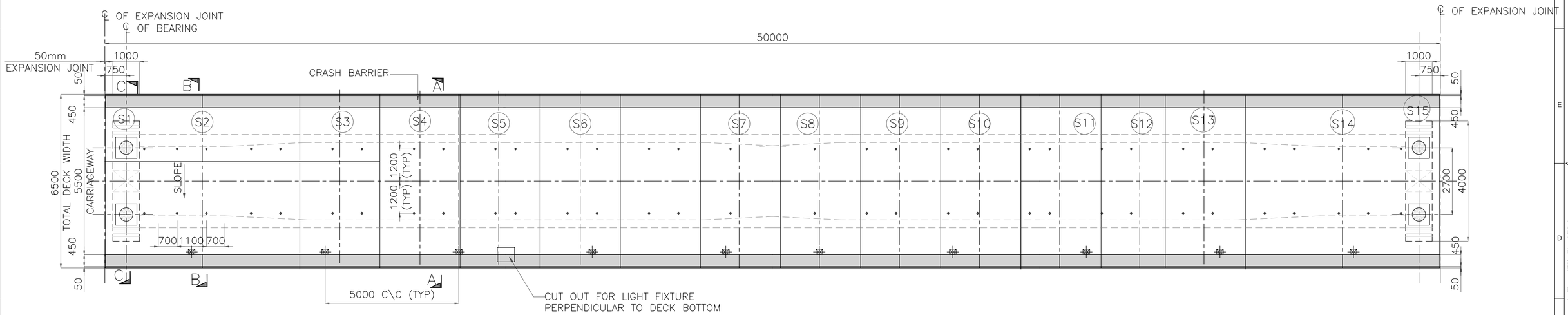

PLAN AT DECK SLAB LEVEL
(SCALE 1:100)

SI NO.	DESCRIPTION	REVISION.	BY	DATE

RELEASED FOR
- Draft Detailed Project Report
- Detailed Project Report
- TENDER

CLIENT :
Bengaluru Smart Infrastructure Limited
Office of the Project Engineer-1, B-Smile,
Room No.108, 1st Floor, Annexe-2 Building,
N.R.Square, BBMP Bengaluru-560002

CONSULTANT:
Infra Support
Your Complete Engineering Partner
INFRA SUPPORT ENGINEERING CONSULTANTS PVT. LTD
An ISO 9001-2015 Certified Company
Infra House, #456/11/1, Hennur Bande,
Hennur Bagalur Main Road, Kalyan Nagar,
Bangalore - 560 043.
Phone: +91 80 25421364
Email: info@infrasupport.in www.infrasupport.in

DRAWN	CDS	PROJECT:	Detail Project Report (DPR) for Construction of Elevated Corridors for Package 3
DESIGNED	RV	NAME OF WORK	Construction of Grade Separator at Kempegowda Circle Old Yelahanka
CHECKED	TRL		
DATE	Sep - 2025	TITLE :	DIMENSION DETAILS OF 50M SPAN SEGMENTAL BOX SUPERSTRUCTURE
SHEET	01 OF 01	SCALE:	As shown

DRG. NO. : IS \ 2501 \ STR \ GAD-01

JOB NO. 2501
REVISION R0

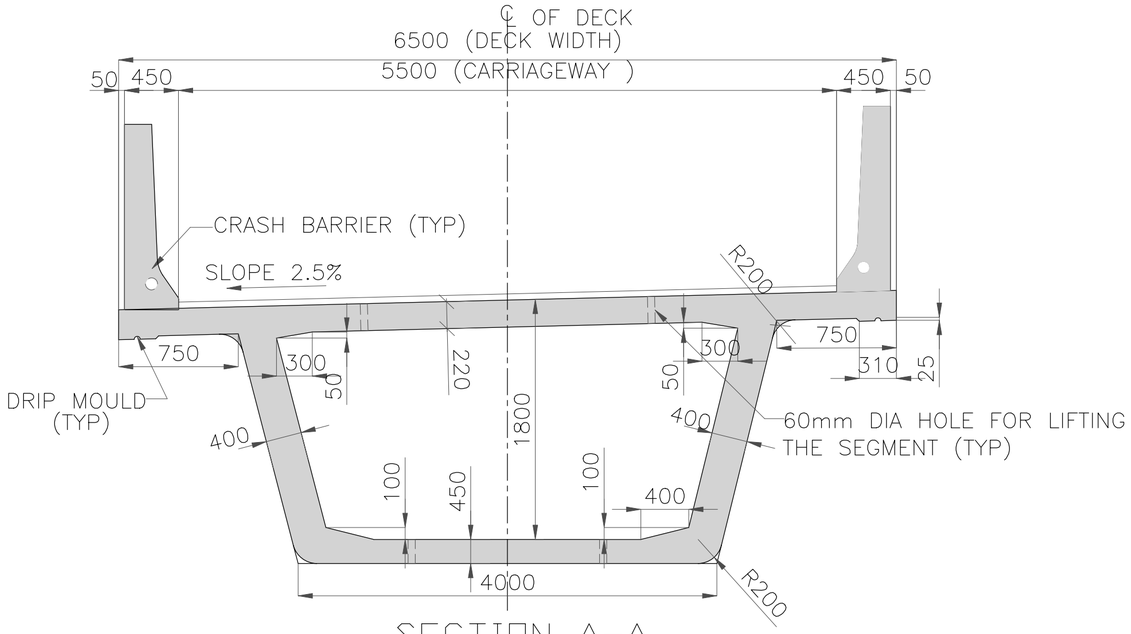

SECTION A-A
MID SECTION
(SCALE 1:50)

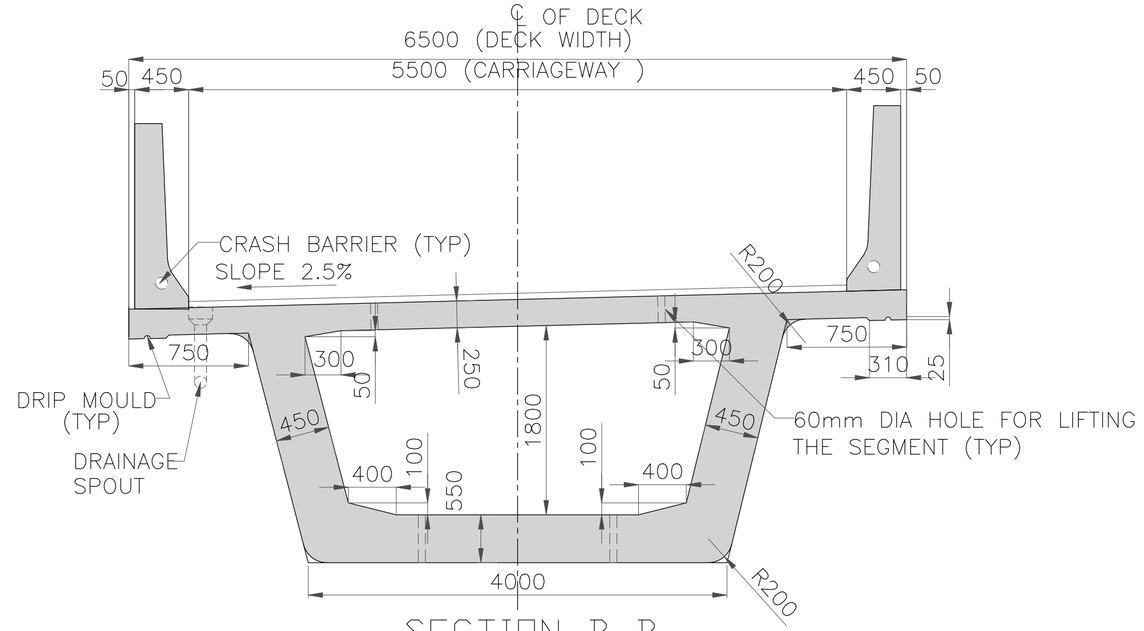

SECTION B-B
END SECTION
(SCALE 1:50)

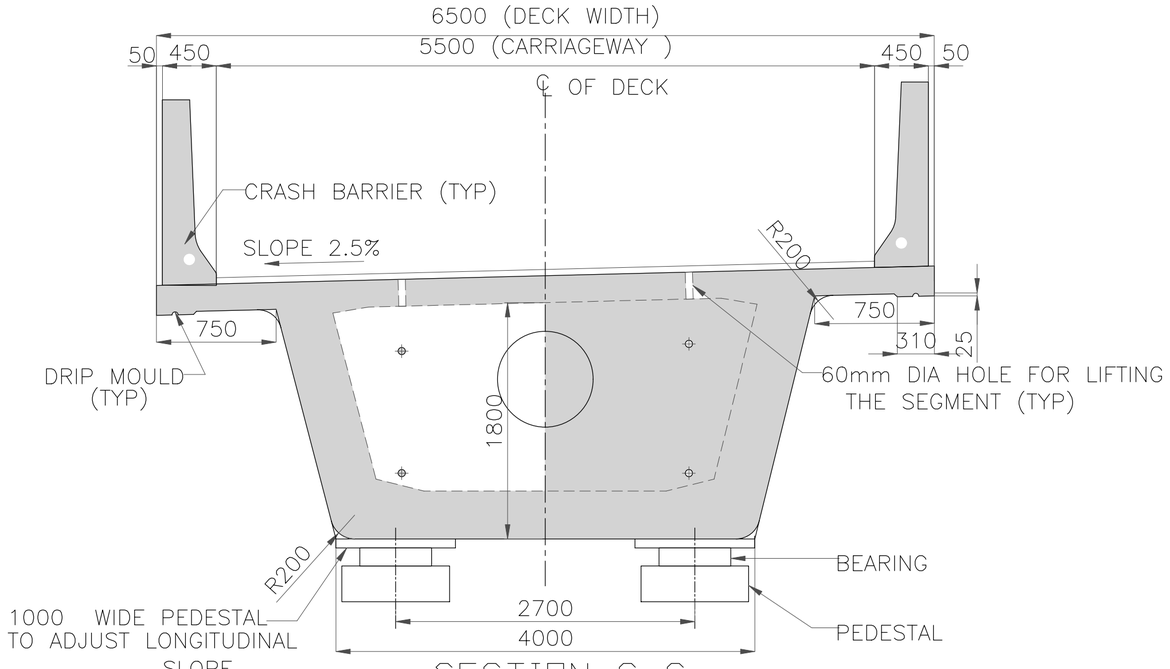

SECTION C-C
(SCALE 1:50)

SI NO.	DESCRIPTION	REVISION.	BY	DATE

RELEASED FOR
- Draft Detailed Project Report
- Detailed Project Report
- TENDER

CLIENT :
Bengaluru Smart Infrastructure Limited
Office of the Project Engineer-1, B-Smile,
Room No.108, 1st Floor, Annexe-2 Building,
N.R.Square, BBMP Bengaluru-560002

CONSULTANT:
Infra Support
Your Complete Engineering Partner
INFRA SUPPORT ENGINEERING CONSULTANTS PVT. LTD
An ISO 9001-2015 Certified Company
Infra House, #456/11/1, Hennur Bande,
Hennur Bagalur Main Road, Kalyan Nagar,
Bangalore - 560 043.
Phone: +91 80 25421364
Email: info@infrasupport.in www.infrasupport.in

DRAWN	CDS	PROJECT:	Detail Project Report (DPR) for Construction of Elevated Corridors for Package 3
DESIGNED	RV	NAME OF WORK	Construction of Grade Separator at Kempegowda Circle Old Yelahanka
CHECKED	TRL		
DATE	Sep - 2025	TITLE :	DIMENSION DETAILS OF 50M SPAN SEGMENTAL BOX SUPERSTRUCTURE FOR 6.5M DECK WIDTH
SHEET	01 OF 01	SCALE:	As shown

DRG. NO. : IS \ 2501 \ STR \ GAD-01

JOB NO. 2501
REVISION R0

SUB STRUCTURE

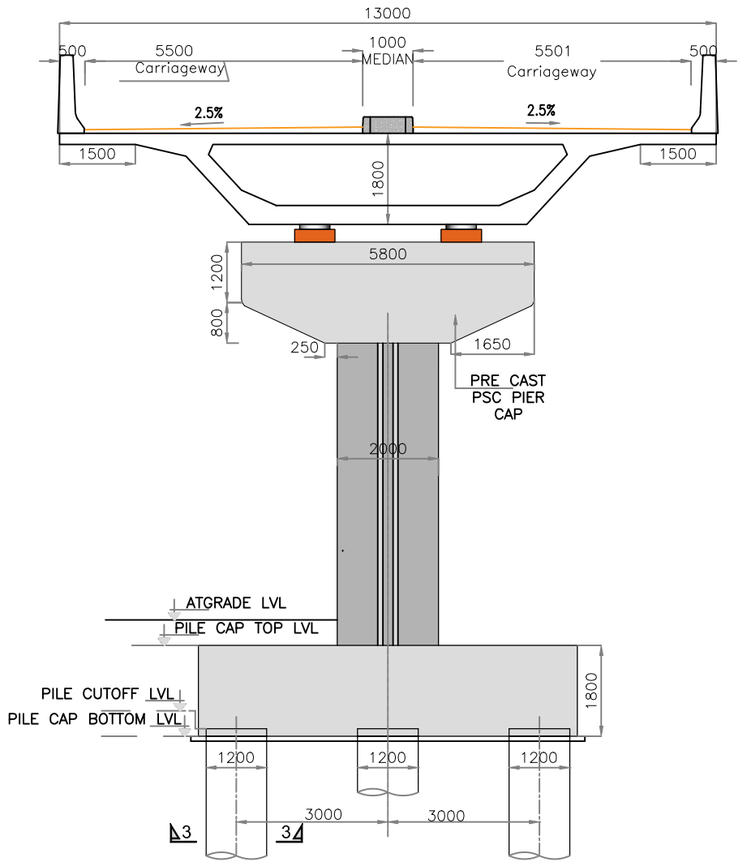

SECTION 1-1

FOR (30m SPAN) 13.0 DECK

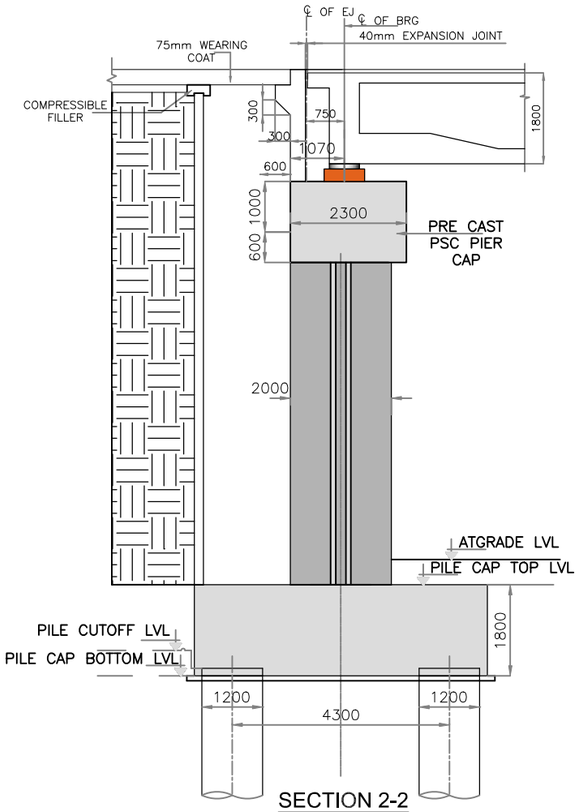

SECTION 2-2

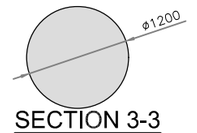

SECTION 3-3

(SCALE 1:50)

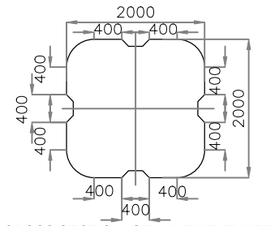

CROSS SECTION OF ABUTMENT PIER

(SCALE 1:50)

NOTES

1. ALL DIMENSIONS ARE IN MILLIMETERS.
2. ALL DESIGN MIX CONCRETE SHALL BE CONFIRM TO SEC-6 CL:18.54 OF IRC -112 - 2020.
3. GRADE OF STEEL SHALL BE Fe 500 H.Y.S.D BARS AS PER TABLE 18.1 OF IRC - 112 -2020.
4. GRADE OF CONCRETE
   1. PIER : M35
   2. PILE CAP : M35
   3. PILE :M35
   4. PSC PIER CAP :M55
5. LEVELING COURSE BELOW FOUNDATION SHALL BE 100 THICK IN CEMENT CONCRETE M15
6. EXPOSURE - MODERATE
7. SEISMIC ZONE -II
8. PILE SHALL BE EXECUTED AS PER IS 2911 PART -1 SEC -2.
9. WORKING PILE LOAD
   HORIZONTAL :- 30T
   VERTICAL :- 350T
10. CLEAR COVER TO REINFORCEMENT FOR

FOUNDATION	:	75mm
PIER AND PIER CAP	:	50mm
PEDESTAL	:	40mm

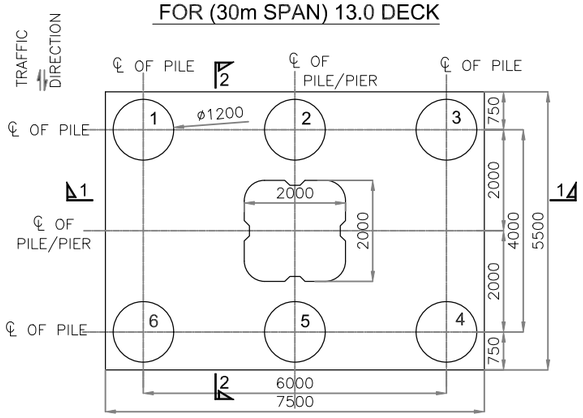

PLAN OF PILE CAP FOR 30M SPAN

(SCALE 1:80)

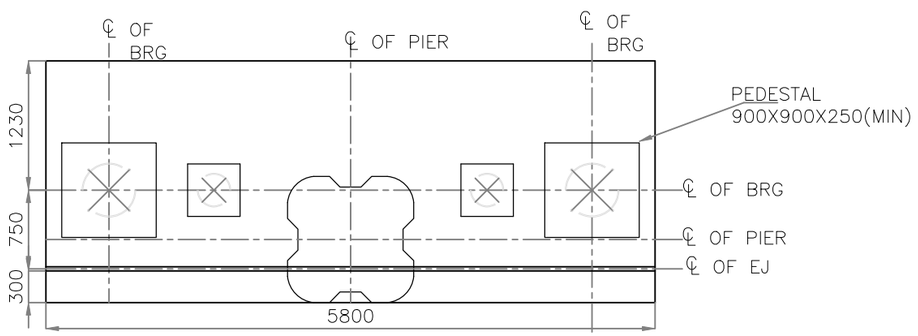

PLAN OF ABUTMENT PIER CAP

SI NO.	DESCRIPTION	REVISION.	BY	DATE

RELEASED FOR

- ☒ Draft Detailed Project Report
- ☐ Detailed Project Report
- ☐ TENDER

CLIENT :

Bengaluru Smart Infrastructure Limited
Office of the Project Engineer-1, B-Smile,
Room No.108, 1st Floor, Annexe-2 Building,
N.R.Square, BBMP Bengaluru-560002

CONSULTANT:

Infra Support
Your Complete Engineering Partner

INFRA SUPPORT ENGINEERING CONSULTANTS PVT. LTD
An ISO 9001-2015 Certified Company
Infra House, #456/11/1, Hennur Bande,
Hennur Bagalur Main Road, Kalyan Nagar,
Bangalore - 560 043,
Phone: +91 80 25421364
Email: Info@Infrasupport.In www.Infrasupport.In

DRAWN	CDS	PROJECT:	Detail Project Report (DPR) for Construction of Elevated Corridors for Package 3		
DESIGNED	RV	NAME OF WORK	Construction of Grade Separator at Kempegowda Circle Old Yelahanka	JOB NO.	2501
CHECKED	TRL				
DATE	Sep - 2025	TITLE :	CROSS SECTION OF ABUTMENT PIER FOR 30m SPAN WITH 13m DECK WIDTH	REVISION	R0
SHEET	01 of 05	SCALE:	As shown	DRG. NO. : IS \ 2501 \ STR \GAD-01	

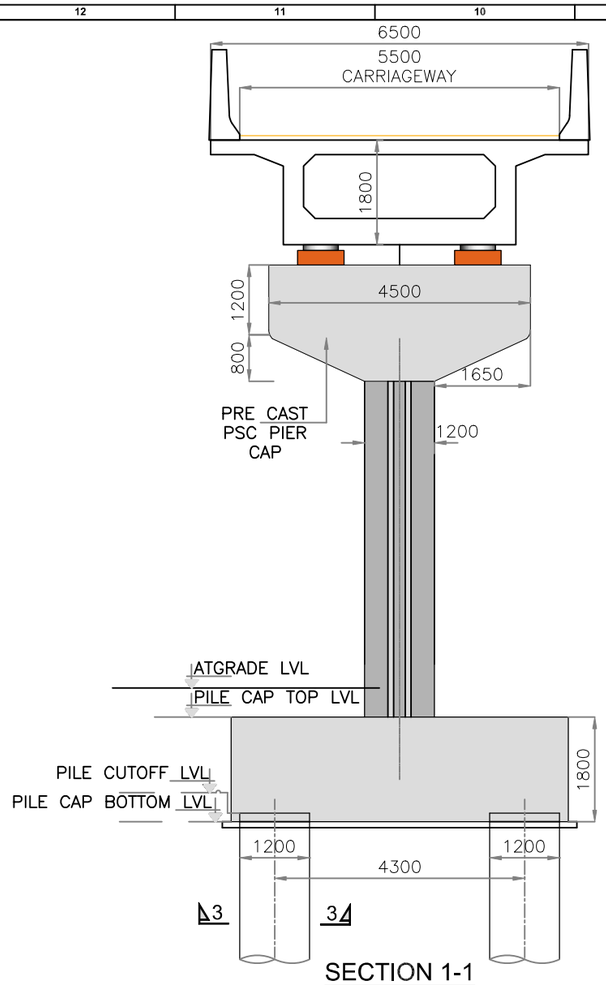

SECTION 1-1

FOR (30m SPAN) 6.5 DECK

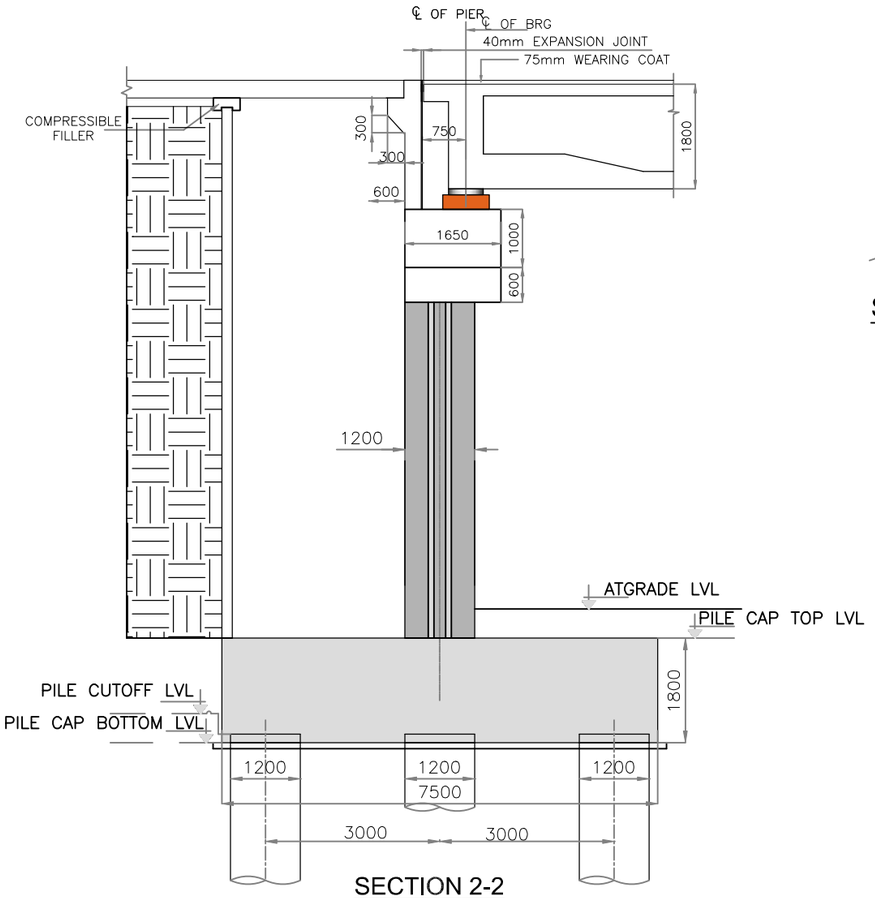

SECTION 2-2

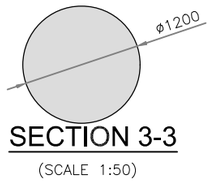

SECTION 3-3

(SCALE 1:50)

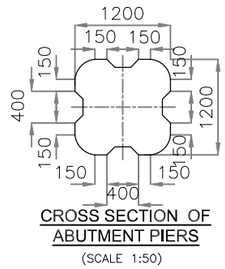

CROSS SECTION OF ABUTMENT PIERS

(SCALE 1:50)

NOTES

1. ALL DIMENSIONS ARE IN MILLIMETERS.
2. ALL DESIGN MIX CONCRETE SHALL BE CONFIRM TO SEC-6 CL:18.54 OF IRC -112 - 2020.
3. GRADE OF STEEL SHALL BE Fe 500 H.Y.S.D BARS AS PER TABLE 18.1 OF IRC - 112 -2020.
4. GRADE OF CONCRETE
   1. PIER : M35
   2. PILE CAP : M35
   3. PILE :M35
   4. PSC PIER CAP :M55
5. LEVELING COURSE BELOW FOUNDATION SHALL BE 100 THICK IN CEMENT CONCRETE M15
6. EXPOSURE - MODERATE
7. SEISMIC ZONE -II
8. PILE SHALL BE EXECUTED AS PER IS 2911 PART -1 SEC -2.
9. WORKING PILE LOAD
   HORIZONTAL :- 30T
   VERTICAL :- 350T
10. CLEAR COVER TO REINFORCEMENT FOR

FOUNDATION	:	75mm
PIER AND PIER CAP	:	50mm
PEDESTAL	:	40mm

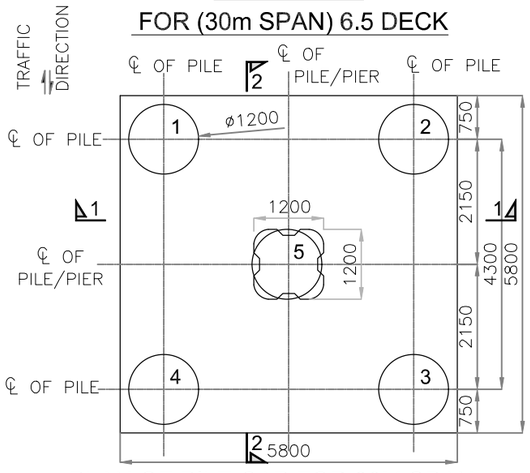

PLAN OF PILE CAP FOR 30M SPAN

(SCALE 1:80)

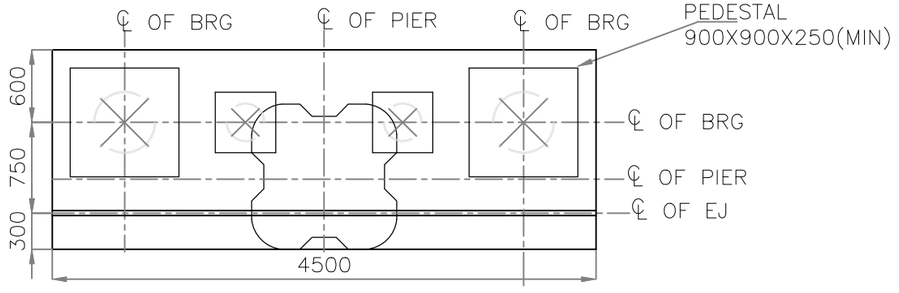

PLAN OF ABUTMENT PIER CAP

SI NO.	DESCRIPTION	REVISION.	BY	DATE

RELEASED FOR

- [x] Draft Detailed Project Report
- [ ] Detailed Project Report
- [ ] TENDER

CLIENT :

Bengaluru Smart Infrastructure Limited
Office of the Project Engineer-1, B-Smile,
Room No.108, 1st Floor, Annexe-2 Building,
N.R.Square, BBMP Bengaluru-560002

CONSULTANT:

Infra Support
Your Complete Engineering Partner

INFRA SUPPORT ENGINEERING CONSULTANTS PVT. LTD
An ISO 9001-2015 Certified Company
Infra House, #456/11/1, Hennur Bande,
Hennur Bagalur Main Road, Kalyan Nagar,
Bangalore - 560 043.
Phone: +91 80 25421364
Email: Info@Infrasupport.In www.Infrasupport.In

DRAWN	CDS	PROJECT:	Detail Project Report (DPR) for Construction of Elevated Corridors for Package 3		
DESIGNED	RV	NAME OF WORK	Construction of Grade Separator at Kempegowda Circle Old Yelahanka	JOB NO.	2501
CHECKED	TRL				
DATE	Sep - 2025	TITLE :	CROSS SECTION OF ABUTMENT PIER FOR 30m SPAN WITH 6.5m DECK WIDTH	REVISION	R0
SHEET	01 of 05	SCALE:	As shown	DRG. NO. : IS \ 2501 \ STR \GAD-01	

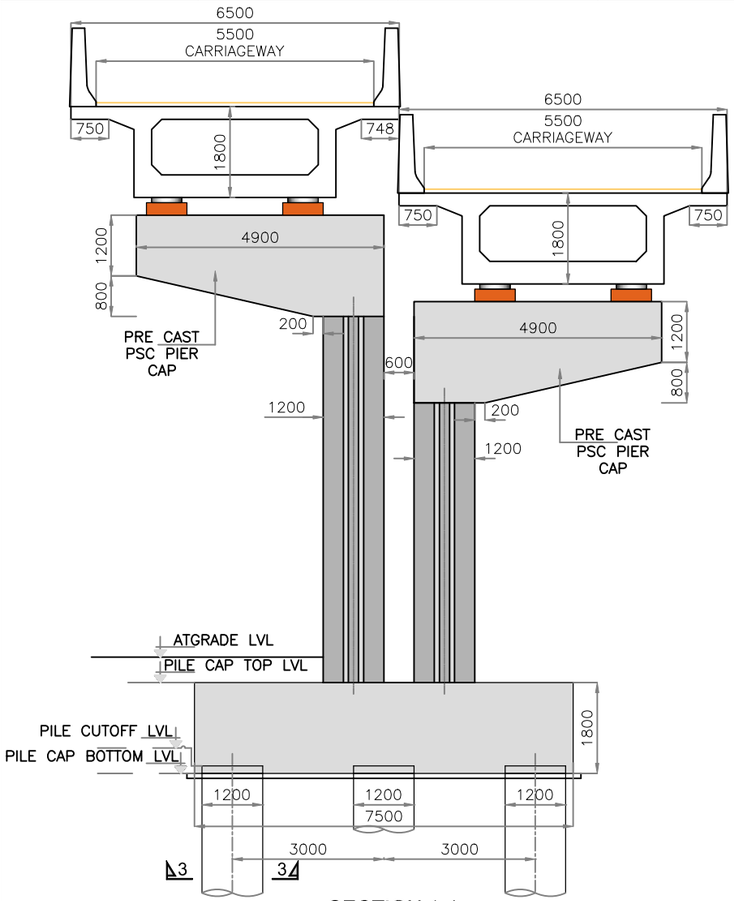

SECTION 1-1

FOR (30m SPAN) 13 DECK CANTILEVER

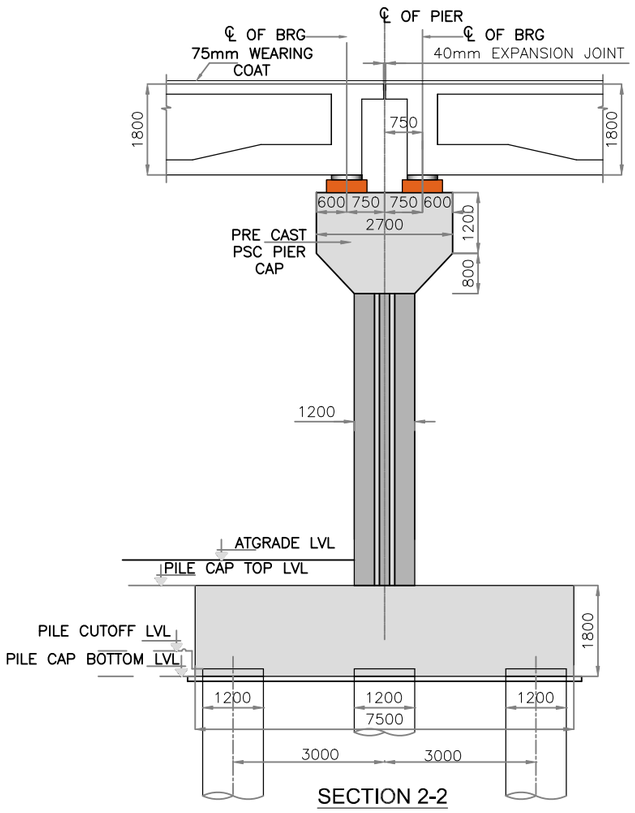

SECTION 2-2

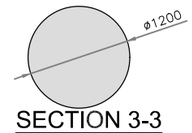

SECTION 3-3

(SCALE 1:50)

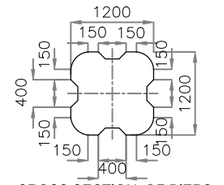

CROSS SECTION OF PIERS
30M CANTILEVER & 25m SPAN

(SCALE 1:50)

NOTES

1. ALL DIMENSIONS ARE IN MILLIMETERS.
2. ALL DESIGN MIX CONCRETE SHALL BE CONFIRM TO SEC-6 CL:18.54 OF IRC -112 - 2020.
3. GRADE OF STEEL SHALL BE Fe 500 H.Y.S.D BARS AS PER TABLE 18.1 OF IRC - 112 -2020.
4. GRADE OF CONCRETE
   1. PIER : M35
   2. PILE CAP : M35
   3. PILE :M35
   4. PSC PIER CAP :M55
5. LEVELING COURSE BELOW FOUNDATION SHALL BE 100 THICK IN CEMENT CONCRETE M15
6. EXPOSURE - MODERATE
7. SEISMIC ZONE -II
8. PILE SHALL BE EXECUTED AS PER IS 2911 PART -1 SEC -2.
9. WORKING PILE LOAD
   HORIZONTAL :- 30T
   VERTICAL :- 350T
10. CLEAR COVER TO REINFORCEMENT FOR

FOUNDATION	:	75mm
PIER AND PIER CAP	:	50mm
PEDESTAL	:	40mm

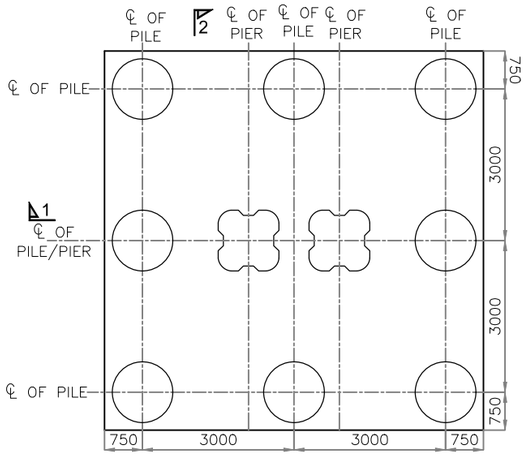

PLAN OF PILE CAP FOR 30M SPAN

(SCALE 1:80)

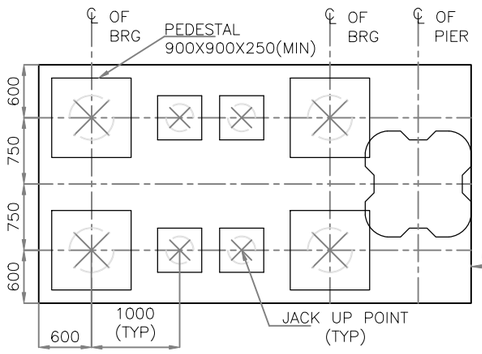

PLAN OF PIER CAP

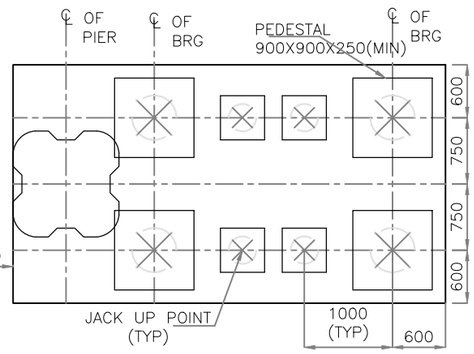

PLAN OF PIER CAP

SI NO.	DESCRIPTION	REVISION.	BY	DATE

RELEASED FOR

- ▨ Draft Detailed Project Report
- ☐ Detailed Project Report
- ☐ TENDER

CLIENT :

Bengaluru Smart Infrastructure Limited
Office of the Project Engineer-1, B-Smile,
Room No.108, 1st Floor, Annexe-2 Building,
N.R.Square, BBMP Bengaluru-560002

CONSULTANT:

Infra Support
Your Complete Engineering Partner

INFRA SUPPORT ENGINEERING CONSULTANTS PVT. LTD
An ISO 9001-2015 Certified Company
Infra House, #456/11/1, Hennur Bande,
Hennur Bagalur Main Road, Kalyan Nagar,
Bangalore - 560 043.
Phone: +91 80 25421364
Email: Info@Infrasupport.In www.Infrasupport.In

DRAWN	CDS	PROJECT:	Detail Project Report (DPR) for Construction of Elevated Corridors for Package 3		
DESIGNED	RV	NAME OF WORK	Construction of Grade Separator at Kempegowda Circle Old Yelahanka	JOB NO.	2501
CHECKED	TRL				
DATE	Sep - 2025	TITLE :	CROSS SECTION OF CANTILEVER TWIN PIERS	REVISION	R0
SHEET	01 of 05	SCALE:	As shown	DRG. NO. : IS \ 2501 \ STR \GAD-01	

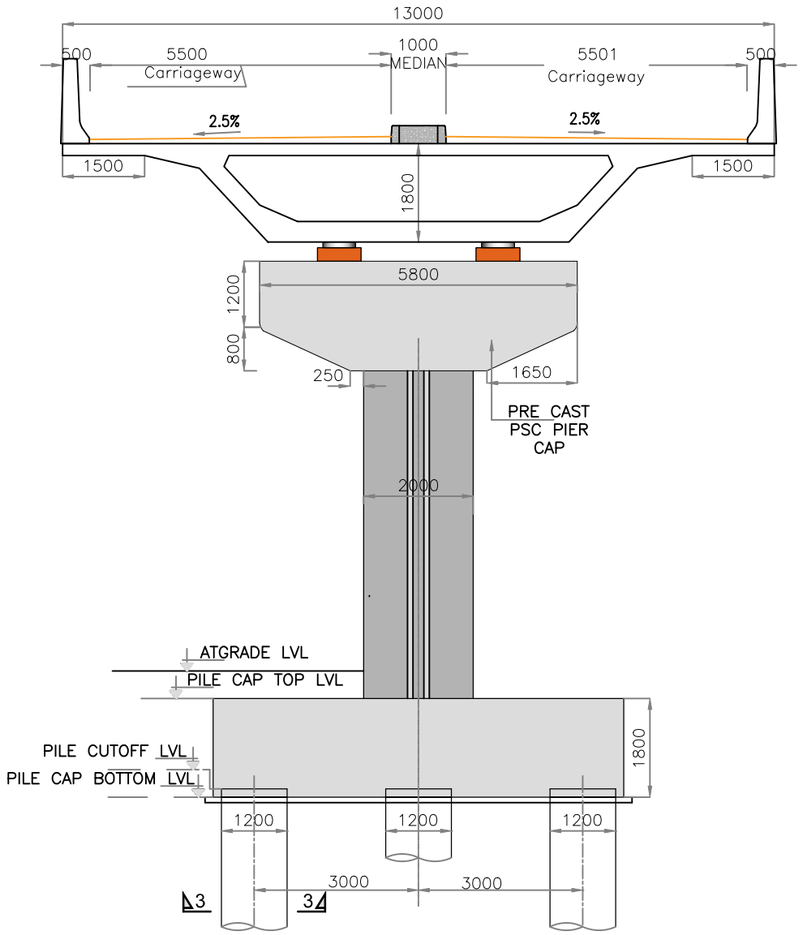

SECTION 1-1
FOR (30m SPAN) 13.0 DECK

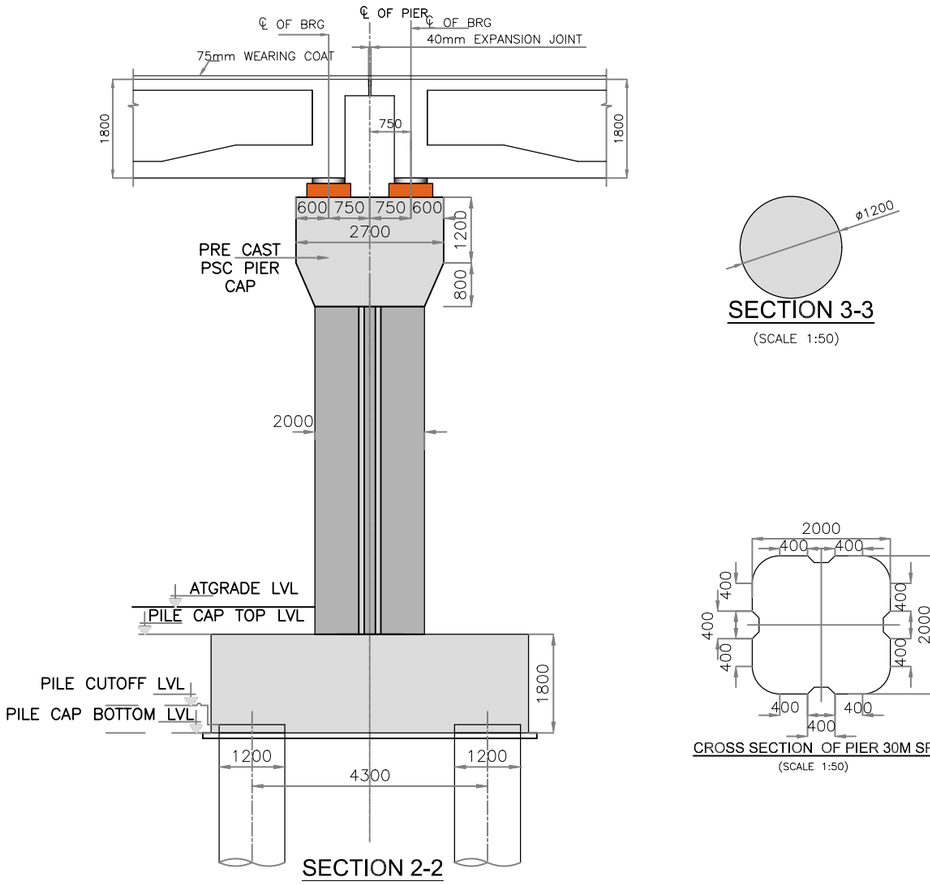

SECTION 2-2

SECTION 3-3
(SCALE 1:50)

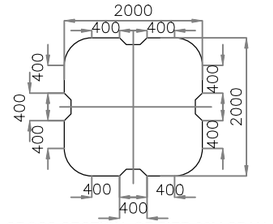

CROSS SECTION OF PIER 30M SPAN
(SCALE 1:50)

NOTES

1. ALL DIMENSIONS ARE IN MILLIMETERS.
2. ALL DESIGN MIX CONCRETE SHALL BE CONFIRM TO SEC-6 CL:18.54 OF IRC -112 - 2020.
3. GRADE OF STEEL SHALL BE Fe 500 H.Y.S.D BARS AS PER TABLE 18.1 OF IRC - 112 -2020.
4. GRADE OF CONCRETE
   1. PIER : M35
   2. PILE CAP : M35
   3. PILE :M35
   4. PSC PIER CAP :M55
5. LEVELING COURSE BELOW FOUNDATION SHALL BE 100 THICK IN CEMENT CONCRETE M15
6. EXPOSURE - MODERATE
7. SEISMIC ZONE -II
8. PILE SHALL BE EXECUTED AS PER IS 2911 PART -1 SEC -2.
9. WORKING PILE LOAD
   HORIZONTAL :- 30T
   VERTICAL :- 350T
10. CLEAR COVER TO REINFORCEMENT FOR

FOUNDATION	:	75mm
PIER AND PIER CAP	:	50mm
PEDESTAL	:	40mm

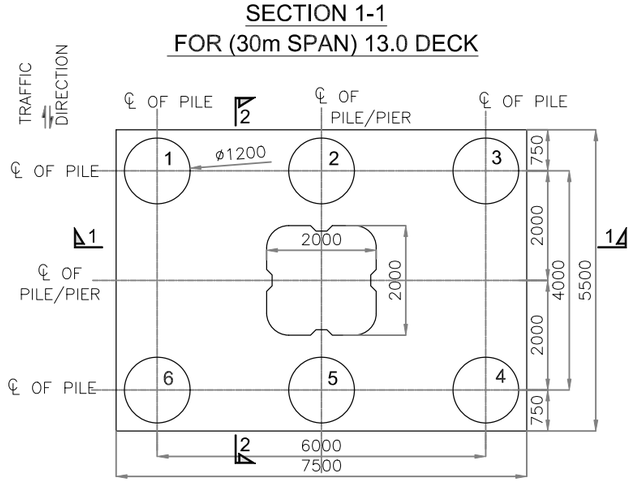

PLAN OF PILE CAP FOR 30M SPAN
(SCALE 1:80)

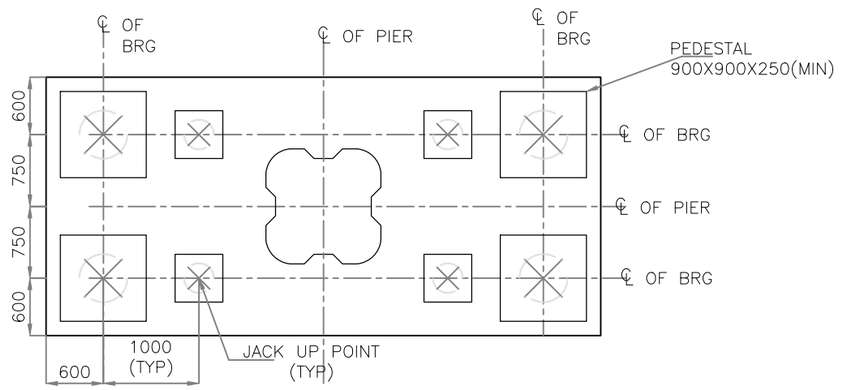

PLAN OF PIER CAP

SI NO.	DESCRIPTION	REVISION.	BY	DATE

RELEASED FOR
- ☒ Draft Detailed Project Report
- ☐ Detailed Project Report
- ☐ TENDER

CLIENT :
Bengaluru Smart Infrastructure Limited
Office of the Project Engineer-1, B-Smile,
Room No.108, 1st Floor, Annexe-2 Building,
N.R.Square, BBMP Bengaluru-560002

CONSULTANT:
Infra Support
Your Complete Engineering Partner
INFRA SUPPORT ENGINEERING CONSULTANTS PVT. LTD
An ISO 9001-2015 Certified Company
Infra House, #456/11/1, Hennur Bande,
Hennur Bagalur Main Road, Kalyan Nagar,
Bangalore - 560 043.
Phone: +91 80 25421364
Email: Info@Infrasupport.In www.Infrasupport.In

DRAWN	CDS	PROJECT:	Detail Project Report (DPR) for Construction of Elevated Corridors for Package 3
DESIGNED	RV	NAME OF WORK	Construction of Grade Separator at Kempegowda Circle Old Yelahanka
CHECKED	TRL		
DATE	Sep - 2025	TITLE :	CROSS SECTION OF PIER FOR 30m SPAN WITH 13m DECK WIDTH
SHEET	01 of 05	SCALE:	As shown

DRG. NO. : IS \ 2501 \ STR \GAD-01

JOB NO. 2501

REVISION R0

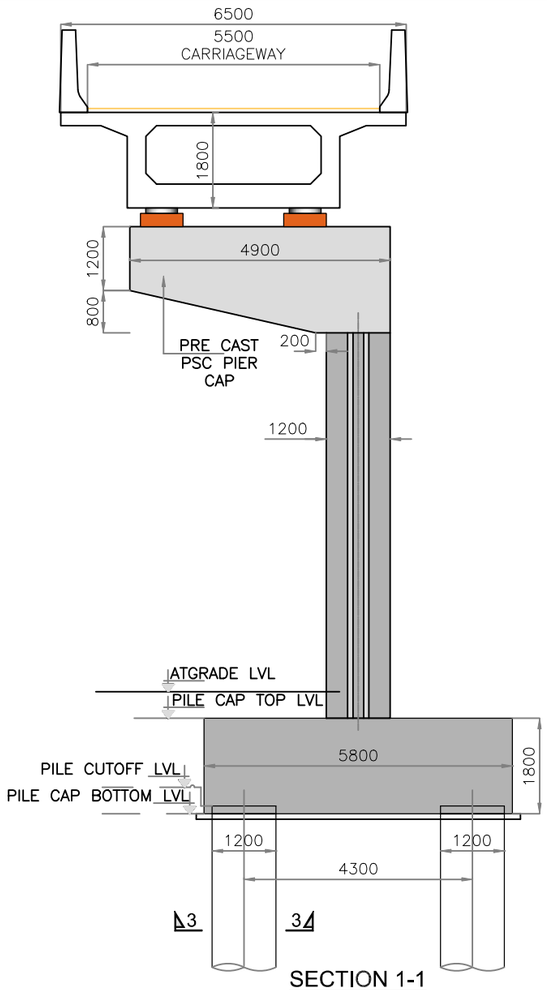

SECTION 1-1

FOR (30m SPAN) 6.5 DECK CANTILEVER

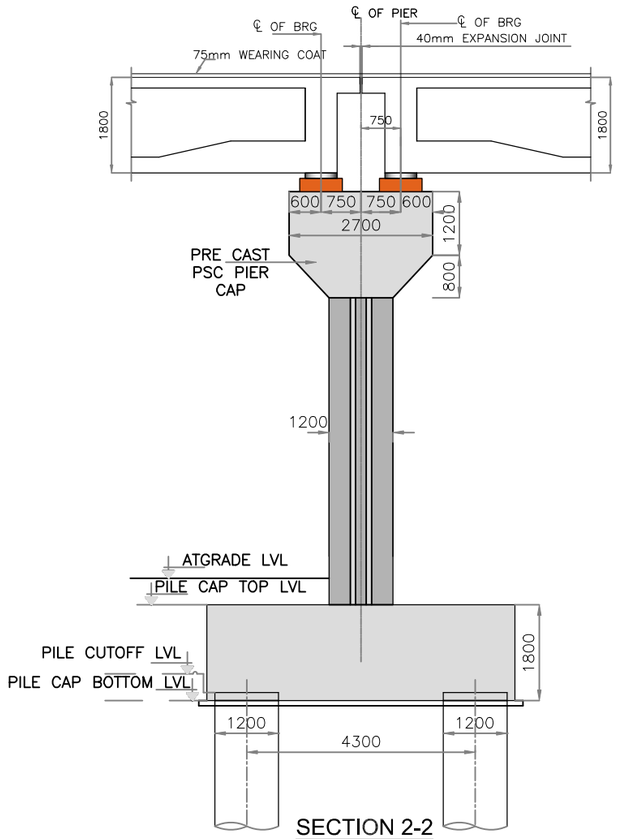

SECTION 2-2

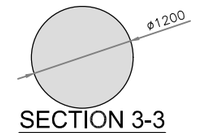

SECTION 3-3

(SCALE 1:50)

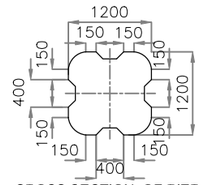

CROSS SECTION OF PIERS
30M CANTILEVER & 25m SPAN

(SCALE 1:50)

NOTES

1. ALL DIMENSIONS ARE IN MILLIMETERS.
2. ALL DESIGN MIX CONCRETE SHALL BE CONFIRM TO SEC-6 CL:18.54 OF IRC -112 - 2020.
3. GRADE OF STEEL SHALL BE Fe 500 H.Y.S.D BARS AS PER TABLE 18.1 OF IRC - 112 -2020.
4. GRADE OF CONCRETE
   1. PIER : M35
   2. PILE CAP : M35
   3. PILE :M35
   4. PSC PIER CAP :M55
5. LEVELING COURSE BELOW FOUNDATION SHALL BE 100 THICK IN CEMENT CONCRETE M15
6. EXPOSURE - MODERATE
7. SEISMIC ZONE -II
8. PILE SHALL BE EXECUTED AS PER IS 2911 PART -1 SEC -2.
9. WORKING PILE LOAD
   HORIZONTAL :- 30T
   VERTICAL :- 350T
10. CLEAR COVER TO REINFORCEMENT FOR

FOUNDATION	:	75mm
PIER AND PIER CAP	:	50mm
PEDESTAL	:	40mm

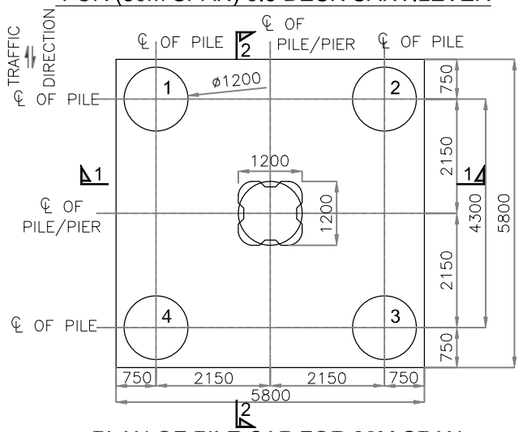

PLAN OF PILE CAP FOR 30M SPAN

(SCALE 1:80)

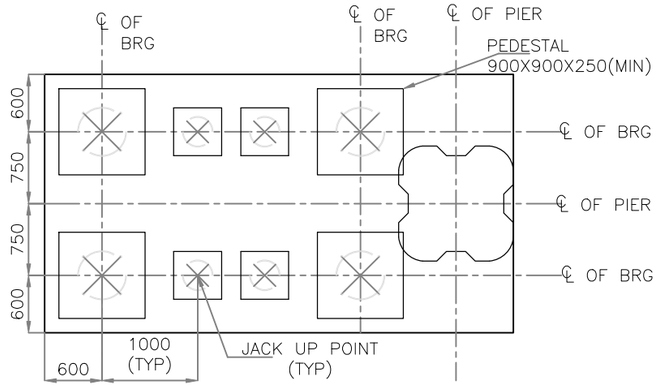

PLAN OF PIER CAP

SI NO.	DESCRIPTION	REVISION.	BY	DATE

RELEASED FOR

- ☒ Draft Detailed Project Report
- ☐ Detailed Project Report
- ☐ TENDER

CLIENT :

Bengaluru Smart Infrastructure Limited
Office of the Project Engineer-1, B-Smile,
Room No.108, 1st Floor, Annexe-2 Building,
N.R.Square, BBMP Bengaluru-560002

CONSULTANT:

Infra Support
Your Complete Engineering Partner

INFRA SUPPORT ENGINEERING CONSULTANTS PVT. LTD
An ISO 9001-2015 Certified Company
Infra House, #456/11/1, Hennur Bande,
Hennur Bagalur Main Road, Kalyan Nagar,
Bangalore - 560 043,
Phone: +91 80 25421364
Email: Info@Infrasupport.In www.Infrasupport.In

DRAWN	CDS	PROJECT:	Detail Project Report (DPR) for Construction of Elevated Corridors for Package 3		
DESIGNED	RV	NAME OF WORK	Construction of Grade Separator at Kempegowda Circle Old Yelahanka		JOB NO. 2501
CHECKED	TRL				
DATE	Sep - 2025	TITLE :	CROSS SECTION OF CANTILEVER PIER FOR 30m SPAN WITH 6.5m DECK WIDTH		REVISION
SHEET	01 of 05	SCALE:	As shown	DRG. NO. : IS \ 2501 \ STR \GAD-01	R0

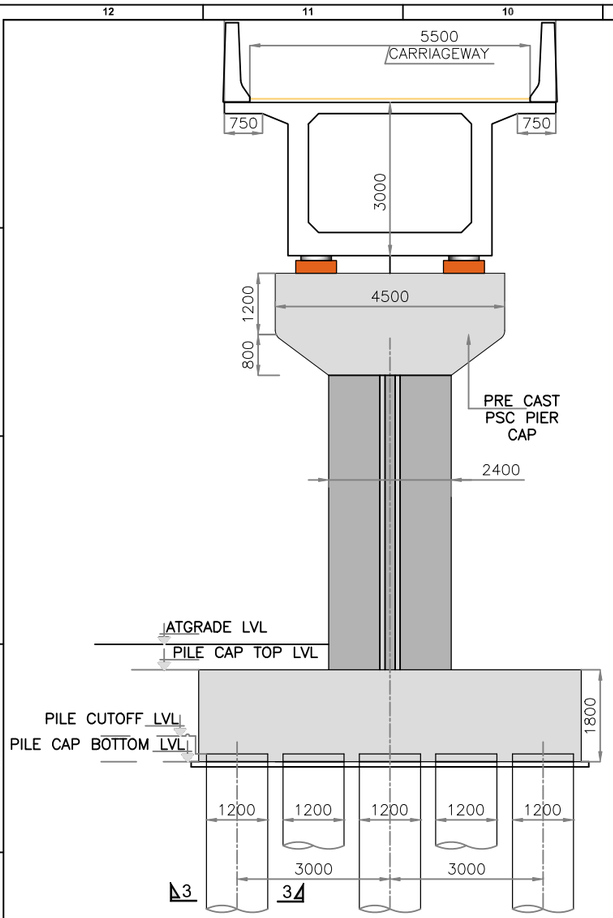

SECTION 1-1
FOR (50m SPAN) 6.5 DECK

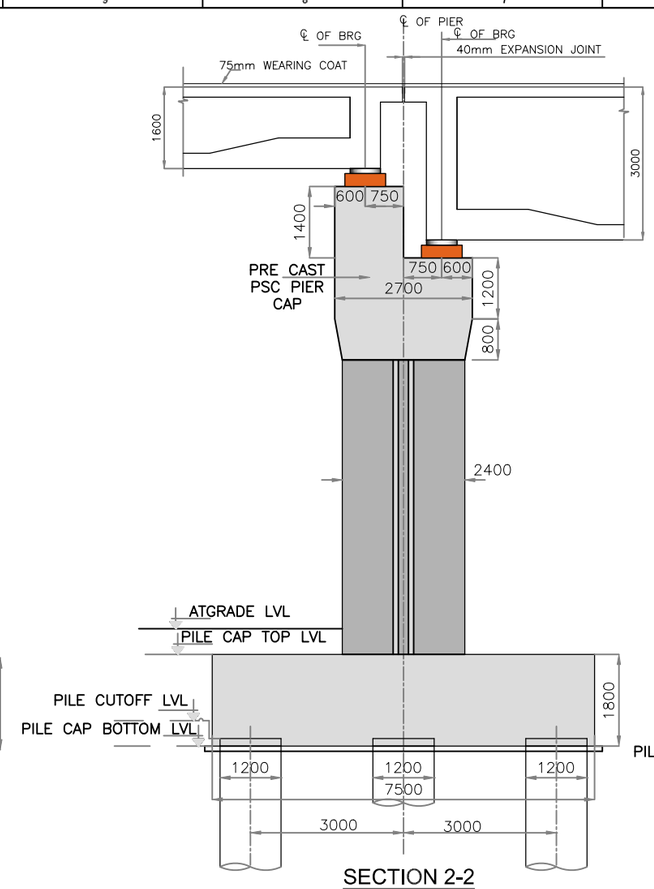

SECTION 2-2
FOR 25 TO 50m SPAN

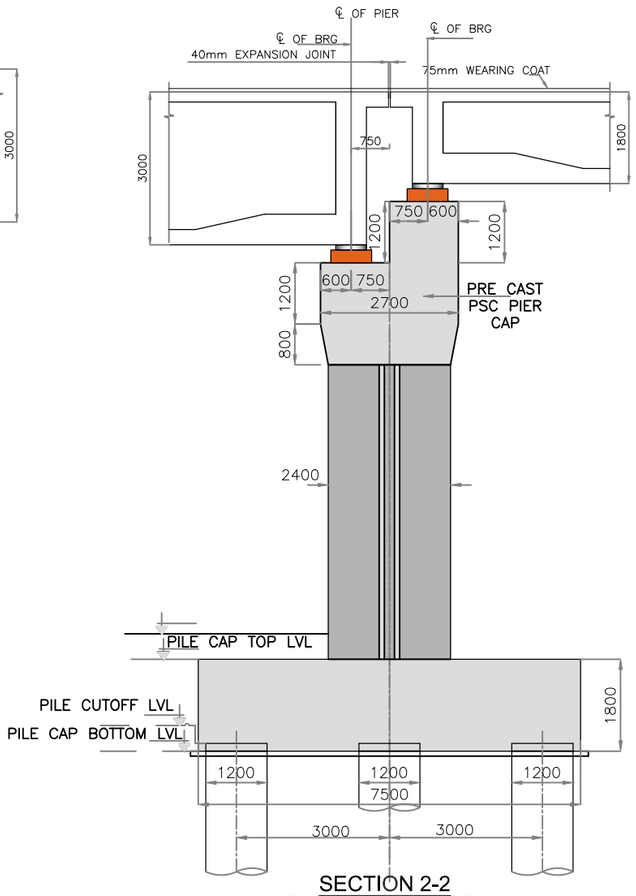

SECTION 2-2
FOR 50 TO 30m SPAN

NOTES

1. ALL DIMENSIONS ARE IN MILLIMETERS.
2. ALL DESIGN MIX CONCRETE SHALL BE CONFIRM TO SEC-6 CL:18.54 OF IRC -112 - 2020.
3. GRADE OF STEEL SHALL BE Fe 500 H.Y.S.D BARS AS PER TABLE 18.1 OF IRC - 112 -2020.
4. GRADE OF CONCRETE
   1. PIER : M35
   2. PILE CAP : M35
   3. PILE :M35
   4. PSC PIER CAP :M55
5. LEVELING COURSE BELOW FOUNDATION SHALL BE 100 THICK IN CEMENT CONCRETE M15
6. EXPOSURE - MODERATE
7. SEISMIC ZONE -II
8. PILE SHALL BE EXECUTED AS PER IS 2911 PART -1 SEC -2.
9. WORKING PILE LOAD
   HORIZONTAL :- 30T
   VERTICAL :- 350T
10. CLEAR COVER TO REINFORCEMENT FOR

FOUNDATION	:	75mm
PIER AND PIER CAP	:	50mm
PEDESTAL	:	40mm

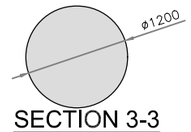

SECTION 3-3
(SCALE 1:50)

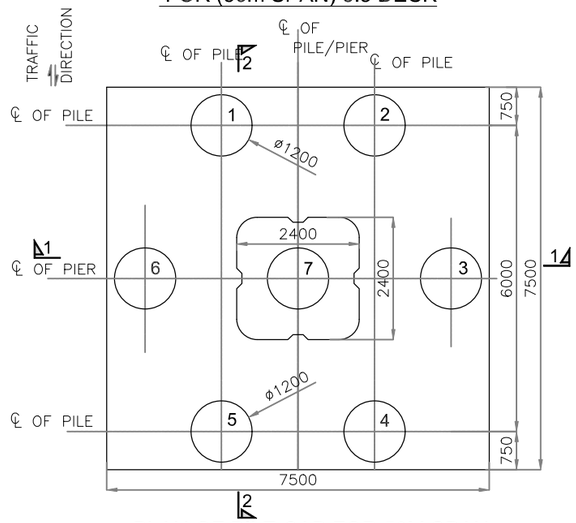

PLAN OF PILE CAP FOR 50M SPAN

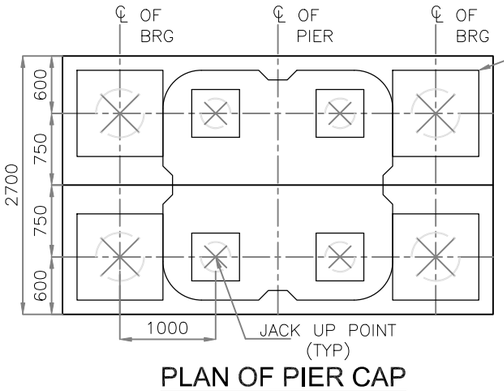

PLAN OF PIER CAP

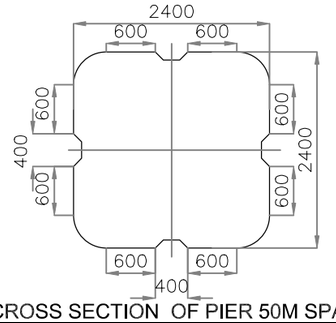

CROSS SECTION OF PIER 50M SPAN
(SCALE 1:50)

SI NO.	DESCRIPTION	REVISION.	BY	DATE

RELEASED FOR
- ☒ Draft Detailed Project Report
- ☐ Detailed Project Report
- ☐ TENDER

CLIENT :
Bengaluru Smart Infrastructure Limited
Office of the Project Engineer-1, B-Smile,
Room No.108, 1st Floor, Annexe-2 Building,
N.R.Square, BBMP Bengaluru-560002

CONSULTANT:
Infra Support
Your Complete Engineering Partner
INFRA SUPPORT ENGINEERING CONSULTANTS PVT. LTD
An ISO 9001-2015 Certified Company
Infra House, #456/11/1, Hennur Bande,
Hennur Bagalur Main Road, Kalyan Nagar,
Bangalore - 560 043.
Phone: +91 80 25421364
Email: Info@Infrasupport.In www.Infrasupport.In

DRAWN	CDS	PROJECT:	Detail Project Report (DPR) for Construction of Elevated Corridors for Package 3		
DESIGNED	RV	NAME OF WORK	Construction of Grade Separator at Kempegowda Circle Old Yelahanka		JOB NO. 2501
CHECKED	TRL				
DATE	Sep - 2025	TITLE :	CROSS SECTION OF PIER FOR 50m SPAN WITH 6.5m DECK WIDTH		REVISION R0
SHEET	01 of 05	SCALE:	As shown	DRG. NO. : IS \ 2501 \ STR \GAD-01	

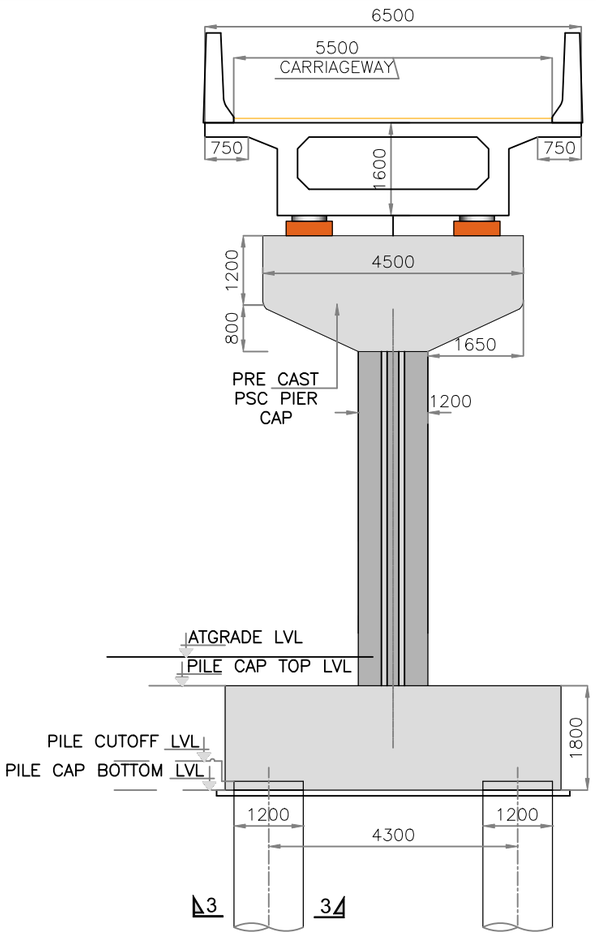

SECTION 1-1
FOR (25m SPAN) 6.5 DECK

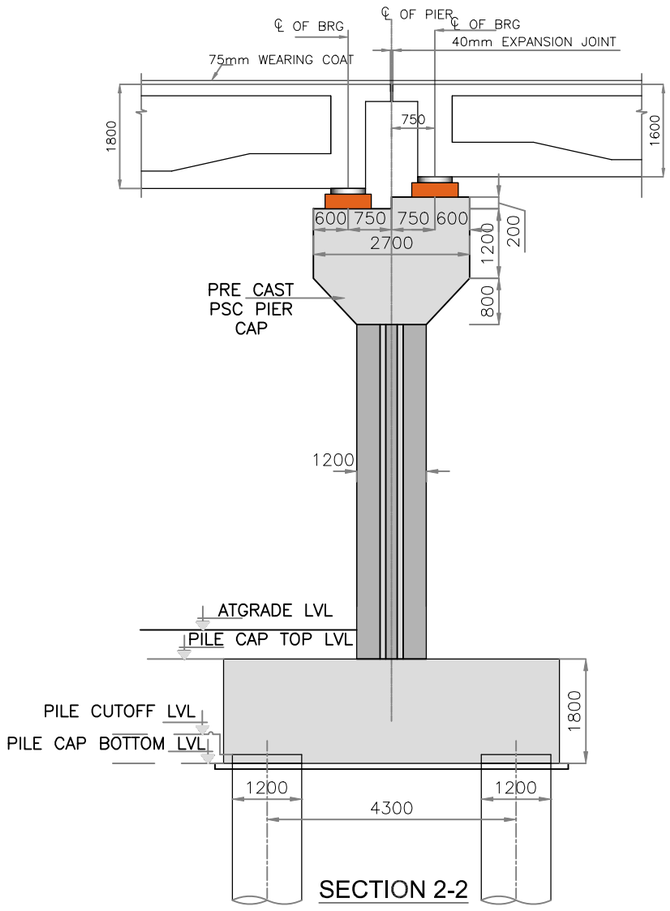

SECTION 2-2

SECTION 3-3
(SCALE 1:50)

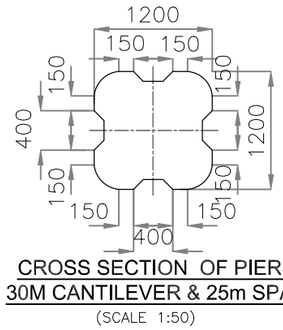

CROSS SECTION OF PIERS
30M CANTILEVER & 25m SPAN
(SCALE 1:50)

NOTES

1. ALL DIMENSIONS ARE IN MILLIMETERS.
2. ALL DESIGN MIX CONCRETE SHALL BE CONFIRM TO SEC-6 CL:18.54 OF IRC -112 - 2020.
3. GRADE OF STEEL SHALL BE Fe 500 H.Y.S.D BARS AS PER TABLE 18.1 OF IRC - 112 -2020.
4. GRADE OF CONCRETE
   1. PIER : M35
   2. PILE CAP : M35
   3. PILE :M35
   4. PSC PIER CAP :M55
5. LEVELING COURSE BELOW FOUNDATION SHALL BE 100 THICK IN CEMENT CONCRETE M15
6. EXPOSURE - MODERATE
7. SEISMIC ZONE -II
8. PILE SHALL BE EXECUTED AS PER IS 2911 PART -1 SEC -2.
9. WORKING PILE LOAD
   HORIZONTAL :- 30T
   VERTICAL :- 350T
10. CLEAR COVER TO REINFORCEMENT FOR

FOUNDATION	:	75mm
PIER AND PIER CAP	:	50mm
PEDESTAL	:	40mm

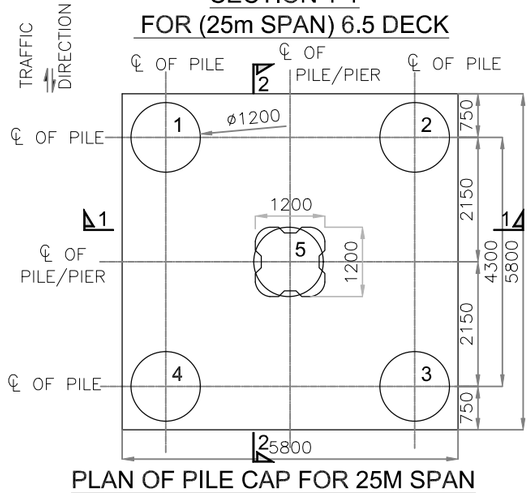

PLAN OF PILE CAP FOR 25M SPAN
(SCALE 1:80)

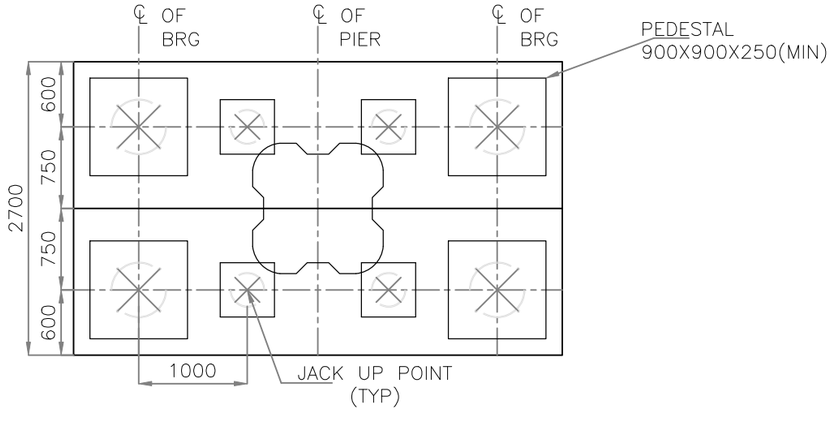

PLAN OF PIER CAP

SI NO.	DESCRIPTION	REVISION.	BY	DATE

RELEASED FOR
- [x] Draft Detailed Project Report
- [ ] Detailed Project Report
- [ ] TENDER

CLIENT :
Bengaluru Smart Infrastructure Limited
Office of the Project Engineer-1, B-Smile,
Room No.108, 1st Floor, Annexe-2 Building,
N.R.Square, BBMP Bengaluru-560002

CONSULTANT:
Infra Support
Your Complete Engineering Partner
INFRA SUPPORT ENGINEERING CONSULTANTS PVT. LTD
An ISO 9001-2015 Certified Company
Infra House, #456/11/1, Hennur Bande,
Hennur Bagalur Main Road, Kalyan Nagar,
Bangalore - 560 043.
Phone: +91 80 25421364
Email: Info@Infrasupport.In www.Infrasupport.In

DRAWN	CDS	PROJECT:	Detail Project Report (DPR) for Construction of Elevated Corridors for Package 3		
DESIGNED	RV	NAME OF WORK	Construction of Grade Separator at Kempegowda Circle Old Yelahanka	JOB NO.	2501
CHECKED	TRL				
DATE	Sep - 2025	TITLE :	CROSS SECTION OF PIER FOR 25m SPAN WITH 6.5m DECK WIDTH	REVISION	R0
SHEET	01 of 05	SCALE:	As shown	DRG. NO. : IS \ 2501 \ STR \GAD-01	

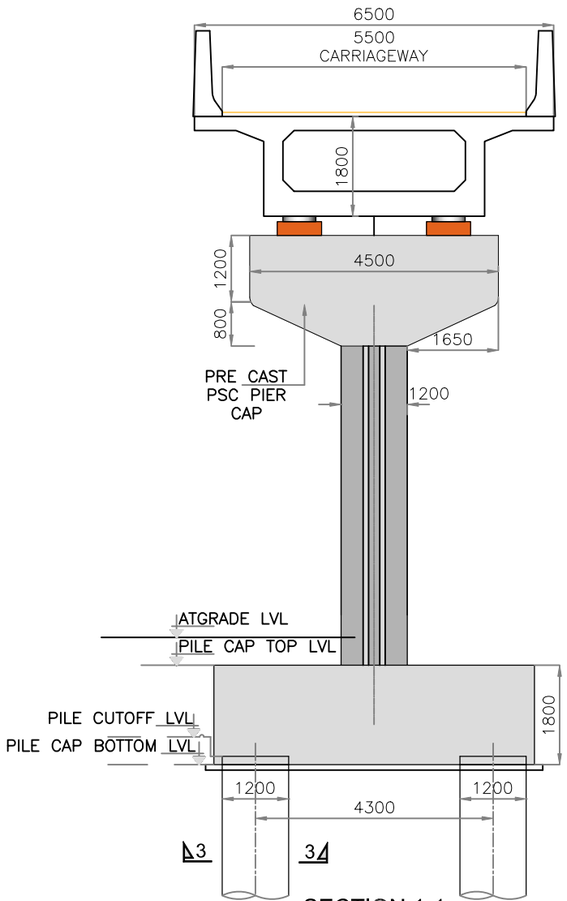

SECTION 1-1

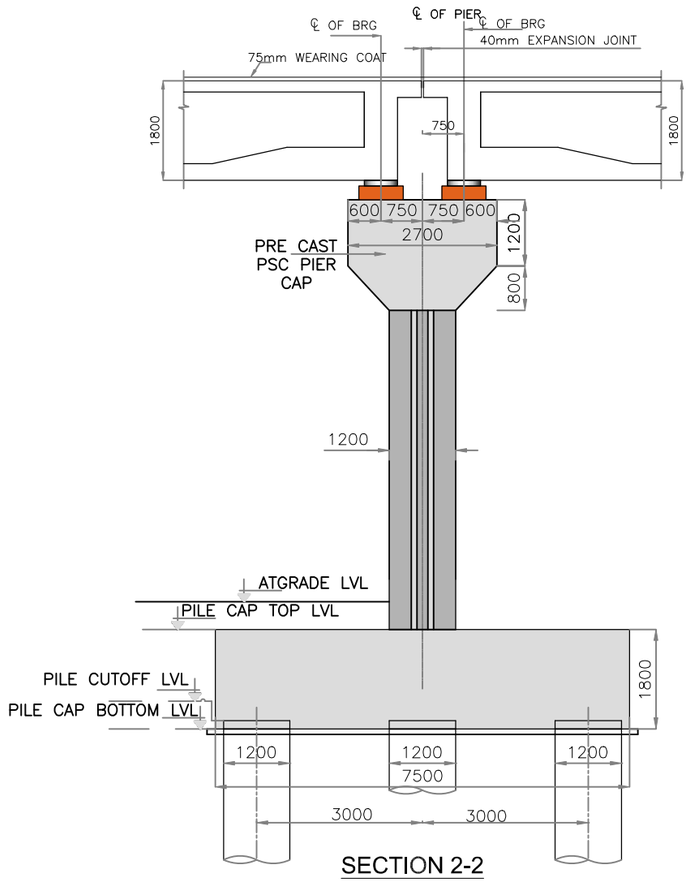

SECTION 2-2

FOR (30m SPAN) 6.5 DECK

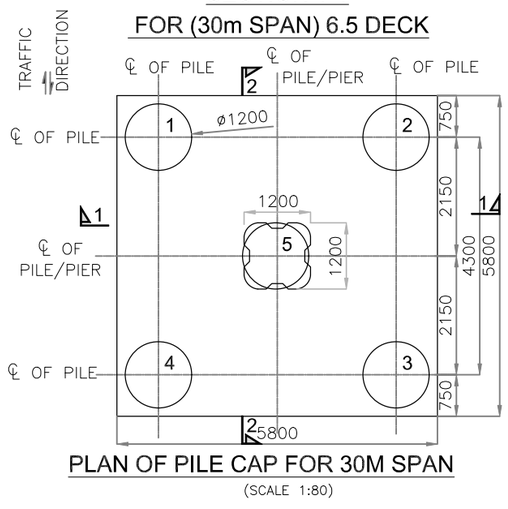

PLAN OF PILE CAP FOR 30M SPAN

(SCALE 1:80)

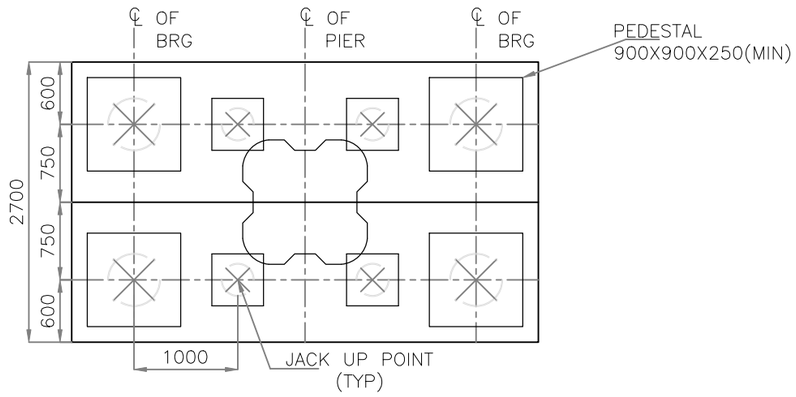

PLAN OF PIER CAP

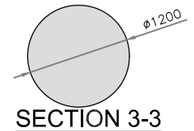

SECTION 3-3

(SCALE 1:50)

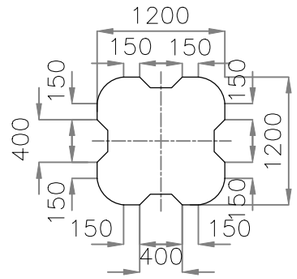

CROSS SECTION OF PIERS
30M CANTILEVER & 25m SPAN

(SCALE 1:50)

NOTES

1. ALL DIMENSIONS ARE IN MILLIMETERS.
2. ALL DESIGN MIX CONCRETE SHALL BE CONFIRM TO SEC-6 CL:18.54 OF IRC -112 - 2020.
3. GRADE OF STEEL SHALL BE Fe 500 H.Y.S.D BARS AS PER TABLE 18.1 OF IRC - 112 -2020.
4. GRADE OF CONCRETE
   1. PIER : M35
   2. PILE CAP : M35
   3. PILE :M35
   4. PSC PIER CAP :M55
5. LEVELING COURSE BELOW FOUNDATION SHALL BE 100 THICK IN CEMENT CONCRETE M15
6. EXPOSURE - MODERATE
7. SEISMIC ZONE -II
8. PILE SHALL BE EXECUTED AS PER IS 2911 PART -1 SEC -2.
9. WORKING PILE LOAD
   HORIZONTAL :- 30T
   VERTICAL :- 350T
10. CLEAR COVER TO REINFORCEMENT FOR

FOUNDATION	:	75mm
PIER AND PIER CAP	:	50mm
PEDESTAL	:	40mm

SI NO.	DESCRIPTION	REVISION.	BY	DATE

RELEASED FOR

- ▨ Draft Detailed Project Report
- ☐ Detailed Project Report
- ☐ TENDER

CLIENT :

Bengaluru Smart Infrastructure Limited
Office of the Project Engineer-1, B-Smile,
Room No.108, 1st Floor, Annexe-2 Building,
N.R.Square, BBMP Bengaluru-560002

CONSULTANT:

Infra Support
Your Complete Engineering Partner

INFRA SUPPORT ENGINEERING CONSULTANTS PVT. LTD
An ISO 9001-2015 Certified Company
Infra House, #456/11/1, Hennur Bande,
Hennur Bagalur Main Road, Kalyan Nagar,
Bangalore - 560 043.
Phone: +91 80 25421364
Email: Info@Infrasupport.In www.Infrasupport.In

DRAWN	CDS	PROJECT:	Detail Project Report (DPR) for Construction of Elevated Corridors for Package 3		
DESIGNED	RV	NAME OF WORK	Construction of Grade Separator at Kempegowda Circle Old Yelahanka		JOB NO. 2501
CHECKED	TRL				
DATE	Sep - 2025	TITLE :	CROSS SECTION OF PIER FOR 30m SPAN WITH 6.5m DECK WIDTH		REVISION R0
SHEET	01 of 05	SCALE:	As shown	DRG. NO. : IS \ 2501 \ STR \GAD-01	

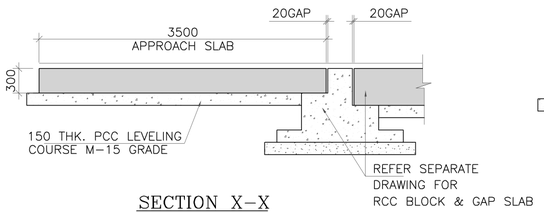

SECTION X-X
(CONCRETE DIMENSION)
(SCALE 1:50)

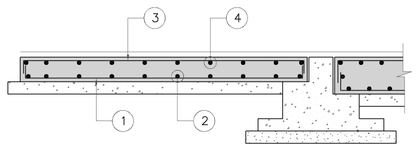

SECTION X-X
(REINFORCEMENT DETAILS)
(SCALE 1:50)

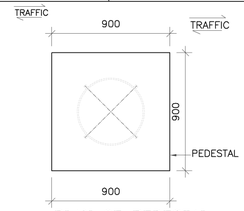

PLAN OF PEDESTAL
(SCALE 1:25)

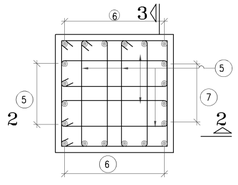

PLAN AT PEDESTAL TOP
(SCALE 1:25)

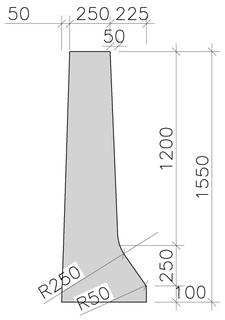

TYPICAL CRASH BARRIER
(SCALE 1:30)

NOTES:

1. ALL DIMENSIONS ARE IN MILLIMETERS.
2. ALL LEVELS AND CHAINAGES ARE IN 'm'.
3. DO NOT SCALE THE DRAWING. FOLLOW FIGURED DIMENSIONS ONLY.
4. TOTAL WIDTH OF DECK= 15M+1.5M+15M=31.5M
5. GRADE OF CONCRETE
   - A. APPROACH SLAB –M30
   - B. CRASH BARRIER –M40
   - C. PEDESTAL –M40
   - D. PCC –M15
   - E. KERB –M40
   - F. GAP SLAB –M35
6. FOR APPROACH DETAILS REFER SEPARATE DRAWING IN THE DRAWING IN CASE OF ANY CHANGES IN LEVELS ,SAME
7. CONTRACTOR SHALL BE RE-VERIFY THE LEVELS INDICATED SHALL BE COMMUNICATED WITH CONSULTANT BEFORE EXECUTION .
8. THE DESIGNS HAVE BEEN DONE FOR SV LOAD,70R WHEELED & CLASS A LIVE LOADS FOR COMBINATIONS ACCORDING TO IRC:6-2017 TABLE NO-6A S.NO-4 AND THE GOVERNING CASES FOR DESIGN HAVE BEEN TAKEN INTO CONSIDERATION.

REFERENCES:

1. PLAN & PROFILE
2. IRC:86, IRC:106-FOR HIGHWAY GEOMETRY.
3. (i) IRC:73-2023, (ii) SP:87-2019
4. GEO TECHNICAL REPORT
6. FOR STRUCTURAL DETAILS REFER RELEVANT DRAWINGS

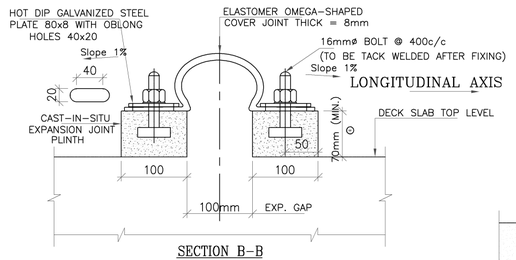

SECTION B-B
(DIMENSION DETAIL)
(SCALE 1:5)

⊕ - AS PER VENDOR'S RECOMMENDATION.

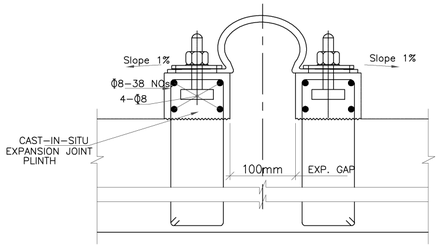

SECTION B-B
(REINFORCEMENT DETAIL)
(SCALE 1:5)

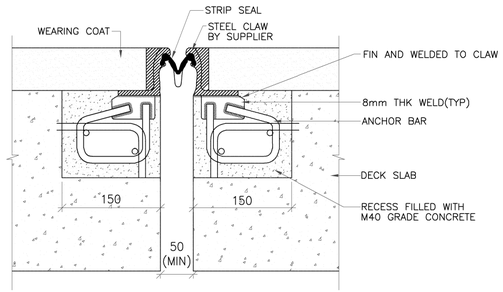

EXPANSION JOINT (FOR BRIDGE UP AND DOWN RAMPS)

(STRIP SEAL TYPE)
(SCALE 1:5)

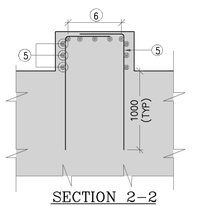

SECTION 2-2
[MESH REINFORCEMENT NOT SHOWN]
(SCALE 1:25)

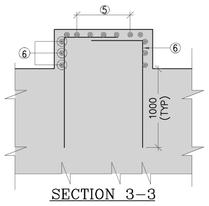

SECTION 3-3
[MESH REINFORCEMENT NOT SHOWN]
(SCALE 1:25)

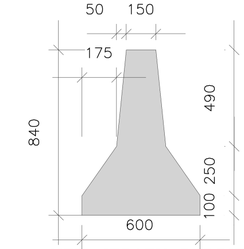

NEW JERSEY BARRIER

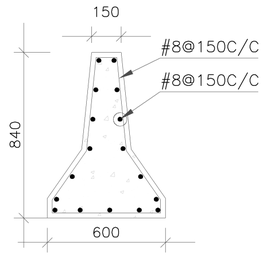

REINFORCEMENT DETAILS

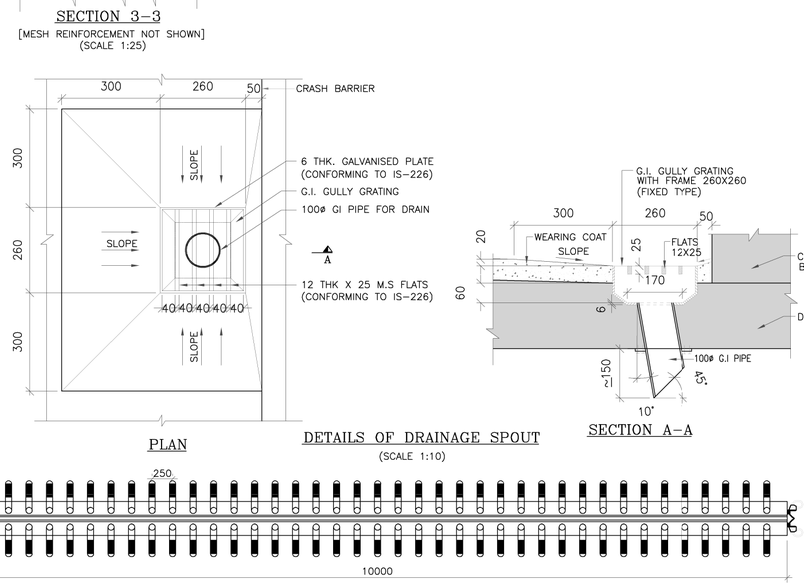

PLAN

DETAILS OF DRAINAGE SPOUT
(SCALE 1:10)

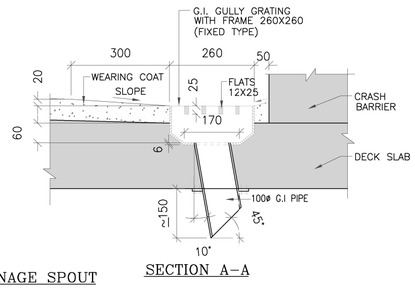

SECTION A-A

PLAN OF EXPANSION JOINT
(SCALE 1:40)

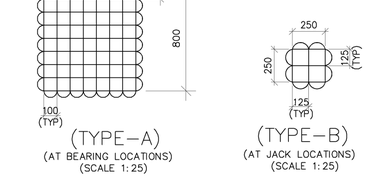

(TYPE-A)
(AT BEARING LOCATIONS)
(SCALE 1:25)

(TYPE-B)
(AT JACK LOCATIONS)
(SCALE 1:25)

ϕ8 MESH REINFORCEMENT DETAILS
[IN TWO LAYERS ONE AT 20 FROM TOP AND ANOTHER AT 100 FROM TOP]
(SCALE 1:25)

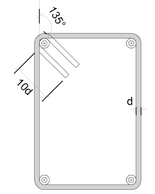

TYPICAL DETAIL OF
HOOK IN CLOSED TIES
(d-DIAMETER OF BAR)
(Scale: 1:20)

SCHEDULE OF REINFORCEMENT

BAR NO.	①	②	③	④	⑤	⑥	⑦
BAR SHAPE	150	150	150	150 150			
REINFORCEMENT	ϕ12@150c/c	12@150c/c	12@150c/c	ϕ12@150c/c	ϕ12 – 5NOS	ϕ12 – 5NOS	ϕ10 – 3NOS

SI NO.	DESCRIPTION	REVISION.	BY	DATE

RELEASED FOR
- ☐ Draft Detailed Project Report
- ☐ Detailed Project Report
- ☐ TENDER

CLIENT :

Bengaluru Smart Infrastructure Limited
Office of the Project Engineer-1, B-Smile,
Room No.108, 1st Floor, Annexe-2 Building,
N.R.Square, BBMP Bengaluru-560002

CONSULTANT:
Infra Support
Your Complete Engineering Partner
INFRA SUPPORT ENGINEERING CONSULTANTS PVT. LTD
An ISO 9001-2015 Certified Company
Infra House, #456/11/1, Hennur Bande,
Hennur Bagalur Main Road, Kalyan Nagar,
Bangalore - 560 043.
Phone: +91 80 25421364
Email: info@infrasupport.in www.infrasupport.in

DRAWN	CDS	PROJECT:	Detail Project Report (DPR) for Construction of Elevated Corridors for Package 3		
DESIGNED	RV	NAME OF WORK	Construction of Grade Separator at Kempegowda Circle Old Yelahanka	JOB NO.	2501
CHECKED	TRL				
DATE	Sep - 2025	TITLE :	MISCELLANEOUS DETAILS ,PEDESTAL DETAILS ,CRASH BARRIER,APPROACH SLAB	REVISION	R0
SHEET	01 of 01	SCALE:	As shown	DRG. NO. : IS \ 2501 \ STR \ SD-01	

Internet\STRUCTURES\STRUCTURAL DRAWINGS\DPR PROJECTS\BMP ELEVATED CORRIDORS\Package 3\E Kempegowda Flyover\TIS Steel P3.dwg